Operating Instructions

for the
Ex-Box Heating Control System

eltherm GmbH Ernst-Heinkel-Str. 6-10 57299 Burbach T.: +49 2736 4413-0 F.: +49 2736 4413-50 info@eltherm.com	86500016 BU – 071	**Operating Instructions for Ex-Box Heating Control System**
	Author	Peter Schmidt
	Revision 14 86500016	09.04.2020

Contents

1. General Information ... 3

2. Cautions ... 4

3. Purpose ... 4

4. Function of the ex-box system ... 5

4.1 Function of ex-box REG/DIS (controller) ... 5
4.2 Function of ex-box REG/LED (controller) ... 5
4.3 Function ex-box LIM/LED (limitter) ... 6
4.4 Function ex-box LIM/DIS (limitter) ... 6
4.5 Function ex-control ... 6
4.6 Function ex-connect ... 7
4.7 Extended function ex-box ... 7

5. Operation ... 8

5.1 Malfunction messages ... 8
5.2 Resetting error codes ... 8
5.3 Reset the device to factory settings ... 8
5.4 Operating ex-box REG/DIS ... 9
5.5 Operating ex-box REG/LED ... 10
5.6 Operating ex-box LIM/DIS (limiter) ... 11
5.7 Operating ex-box LIM/LED (limiter) ... 11
5.8 Operating ex-control ... 11
5.9 Operating ex-connect ... 12
5.10 Accessing the extended options ... 12
5.11 Extended options ex-box REG/DIS ... 13
5.12 Extended function REG/LED ... 20
5.13 Extended function ex-box LIM/DIS ... 20
5.14 Extended function ex-box LIM/LED ... 20

6. Technical data ... 21

7. Mounting / Demounting ... 24

8. Commissioning ... 25

9. Factory Settings ... 25

1. General Information

The ex-box heating control system includes components for the temperature control and measurement of heaters in hazardous areas. The following components belong to the ex-box heating control system:

- ex-box REG/DIS (Controller with display): heating controller with integrated controller pad and CL-Bus interface
- ex-box REG/LED (Controller with display): heating controller without integrated controller pad. Settings may be changed using the external hand held “ex-control” controller pad
- ex-box LIM/DIS (Limiter with display): heating limiter with integrated controller pad and CL-Bus interface
- ex-box LIM/LED (Limiter with display): temperature limiter. Resettable using the external hand held “ex-control” controller pad
- ex-control: external hand held controller pad for use with ex-box LIM/LED and ex-box REG/LED
- ex-connect: PC-Adapter is used to connect one or up to 32 devices of ex-box REG/DIS with a RS232 port form a standard PC. This is useable to monitor and or to change the parameters of each device from the control room. (installation and operation only in non-hazardous areas)

1.1 Hazardous Area Appoval Number

The ex-box heating control system has the following hazardous area appoval number:
IBExU 04 ATEX 1165X

1.2 type of protection

The units ex-box REG/DIS, ex-box REG/LED, LIM/DIS and ex-box LIM/LED equal the hazardous area protection classifications:

II 2G Ex eb mb [ib] IIC T4 Gb
II 2D Ex tb IIIC T100°C Db
-32°C ≤T_a≤+60°C

The device ex-control equals the type of protection:
II 2G Ex ib IIC T4 Gb
II 2D Ex tb IIIC T100°C Db
-32°C ≤T_a≤+60°C

The device ex-connect equals the type of protection:
II (2)G [Ex ib] IIC Gb
II (2)D [Ex tb] IIIC Db

2. Cautions

Cautions that are marked with  (important notice) or  (electrical danger) serve prevention of dangers that may occur, protection of life and heath of persons, and to prevent material damages or malfunctions of the units. **Installation may only be made by approved electricians and according to all valid regulations.**

3. Purpose

The ex-box serves as an electronic temperature measurement and control, or limiter, of industrial surface heating and is suitable for installation in hazardous areas (Gas or combustible dusts atmospheres, 2GD). The operation may occur within or outside of buildings. Heaters with a power supply of 230VAC and maximum 3680 W (equal to 16A load resistance) may be switched. The integrated BUS interface of the ex-box DIS (current loop serial) makes central analysis and setting changes of the measurement from the Control Room possible through de-centralized operation of the ex-box on site at the applicable heating circuits. The ex-connect PC-Adapter serves the connection of one or more (up to 32) ex-box DIS units to a serial RS-232 interface of a PC. This enables a central analysis and setting changes of the of the ex-box (in Ex-area) from the Control Room.

4. Function of the ex-box system

The eltherm ex-box enables a heating control with a 16A load resistance at 230V. The control (2-point switch) is made possible over a 0-point semi-conductor power thyristor. The actual value is measured using an external intrinsically safe PT-100 temperature sensor. A real power load separation is realized over two succeeding switched relays. These separate the heating control (two poled) by unauthorized operation conditions, for example when the current draw load is to large, by to high temperatures or internal faults. A reset of the fault state may be made according to a special code (see 5.2
Resetting error codes) and is only successful by safe operation conditions. An alarm contact makes it possible for the external receipt of faults and alarm conditions. The preset parameters may be factory adjusted for certain applications. A reset of changed values to the factory set values may be accomplished through a special button combination. (refer 5.3
Reset the device to factory settings)

4.1 Function of ex-box REG/DIS (controller)

The ex-box DIS is complimented with a cover integrated operating panel. It is possible to program the heating temperature setpoint and diverse alarms over the four buttons UP, DOWN, ENTER and MENU. Furthermore, it is possible to read the actual temperature of the heating and alarm or faults on the 8 digit LED point matrix display (see 5.1
Malfunction messages). It is also possible to centralize (maximum distance 1000m cable length) manage and control up to 32 units over a serial interface (current loop). (see 8.3
Commissioning Ex-Connect)

4.2 Function of ex-box REG/LED (controller)

The ex-box LED has the same functions as the ex-box REG/DIS, with the exceptions that the integrated control operating panel has been replaced with a status LED lamp and a communications interface for programming using the ex-control. A serial Bus for the central management of the controller is not available. The status LED is capable of displaying the following operation status,

- Heating (Orange),
- Not heating (Green),
- undertemperature (Yellow/ Red blinking),
- overtemperature (Green/Red blinking)
- Fault (Red)
- Alarm (red blinking)

A reset is not possible should a fault be displayed. In this case, an ex-control will be needed to be connected under safe operating conditions in order to perform a reset to normal operation (see 5.2
Reset the device to factory settings). The functions from a ex-box REG/LED are the same as an ex-box REG/DIS in conjunction with an ex-control.

4.3 Function ex-box LIM/LED (limitter)

The ex-box LIM/LED is a limiter for permanent switching off the connected heater when there is an overtemperature or when the current draw load is to large. The unit is also available with dot matrix display. The standard version (without display) signals the following operations;

- Normal Operation (Green LED)
- Overtemperature (blinking Red LED)
- Fault (Red LED)

A reset is not possible should a fault (over temperature, current draw load to high, internal fault) be displayed. The fault will be displayed in text form by versions with Display or in conjunction with a ex-control. The function may be found under the respective “ex-Box DIS” and “ex-Box LED” function descriptions. The functions are the same as the functions mentioned in chapter 4.4 Function ex-box LIM/DIS (limitter)

4.4 Function ex-box LIM/DIS (limitter)

This version is nearly the same as in chapter 4.3 Function ex-box LIM/LED (limitter) mentioned instead of using a dot matrix display. The failure messages were display as text in the display. Errors can be reset directly with the included switches in the top of the box. The parameters were explained under “ex box DIS“ and „ex box LED“.

4.5 Function ex-control

The hand held ex-control pad is used for the programming and display from the ex-box REG/LED controller and ex-box LIM/LED limiter. The ex-control recognizes the unit that it is connected to and automatically activates the appropriate software. The description of how to operate the ex-box LED are the same as those for the ex-box DIS (0

Operating ex-box REG/DIS). The ex-control itself does contain a power supply, but receives the necessary power to function from the unit that it is connected to. The handling is the same as a ex-box xxx/DIS.

4.6 Function ex-connect

The ex-connect PC-adapter has two galvanized separated current circuits. The RS-232 non-intrinsically safe circuit interface is for the PC-connection required signals. The sending and receipt of data, and the power supply are signaled over the LED's. The intrinsically safe circuit supplies two serial power loops for the sending and receipt of data. The connectable interfaces of the ex-box DIS are purely passive, so that current overlays from several power sources in intrinsically safe area are are not possible. The power supply of the intrinsically safe are will also be signaled over an LED.

4.7 Extended function ex-box

The extended functions are for the commissioning, alignment of the PT100 sensors, and for fault diagnostic (see 5. Operation).



They are therefore only to be used by schooled technicians. In case of wrong settings, personal injury and or material damage can occur!

5. Operation

The programming and control management of the ex-box REG/LED and ex-box LIM/LED is performed using the ex-control and which has similar to the operation of the ex-box DIS. The displayed values are generally set either higher or lower using the buttons UP and DOWN. By pressing the ENTER button, the parameters will be saved and activated and when pressing the MENU button, the different parameters will be displayed one after another. Displayed settings may be directly chosen, we have withdrawn from using sub-menus.



Caution is to be made that a PT-100 sensor is connected before switching on the power, otherwise the unit will register a sensor break and must be returned out of the fault state (see 8 Commissioning).

5.1 Malfunction messages

The following error messages can occur in the display:

- Priority 1 COM ERR (inner communication is for more than 10s disconnected)
- Priority 2 INT ERR (internal fault, intrinsically safe operation power supply. Unit overheated; current draw not within tolerance, power load will be disconnected)
- Priority 3 HI ALARM (High alarm temperature achieved, further in operation)
- Priority 4 LO ALARM (Low alarm temperature arrived)

5.2 Resetting error codes

All alarm signals are displayed on the LED with the value of Text - Temp (see 5.4 - Display the actual temperature) and alternate within seconds between the heating temperature. The alarm signal output will be activated in all faults. All faults, except “INT ERR” and “LIM OFF” will reset automatically. To reset, press the ENTER button. The text RES CODE then appears in the display. After pushing the buttons UP and DOWN simultaneously and under safe operating conditions, the unit will return to the normal operation condition (action might be required repeatedly). Maybe you must repeat the last step.

5.3 Reset the device to factory settings

The signal “RES DATA” will appear when the DOWN button has been pushed during normal display. The return of all settable values to factory settings may be made by pushing the UP and Down button simultaneously. The reset is only possible on the device ex-box REG/xxx. Please refer to the factory settings in chapter 9 “factory settings”

5.4 Operating ex-box REG/DIS

After connecting with the power supply, the boxes displays for one second „eltherm“ and another second „ex-box“ (see 8 Commissioning for installation instructions)

The parameters can only be changed on a not keylocked device! Refer the chapter - Adjust the keylock to disable the keylock function.

The following texts are shown in the display by pushing the button MENU. After text - LOAD CUR follows text - TEMP: For a detailed overview please view on Picture 1 (overview standard parameters)

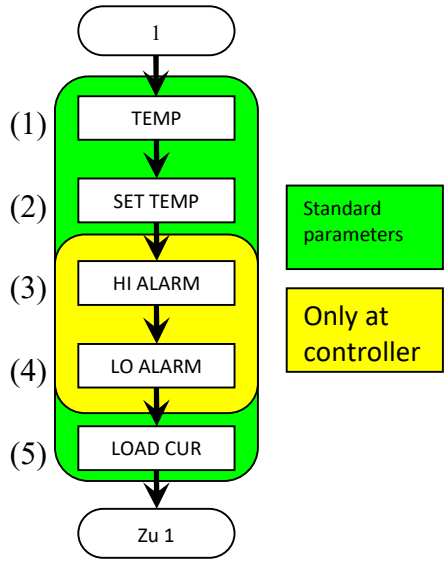

Picture 1 (overview standard parameters)

- **Display the actual temperature**

TEMP after 1,5 sec xxxC (heating on), xxxC (heating off)
The actual heating temperature will be displayed. A sensor short circuit will be presumed by a temperature under –40°C, a sensor break will be presumed by a temperature over +300°C. A fault will be given in both situations and the unit must be reset. The is the signal for „heating on“

- **Adjust the heating temperature**

SET TEMP after 1,5 sec SET xxxC
The cut-off temperature of the connected heater will be set here. The cut-off temperature is programmable within the values of 0°C up to the high temperature value. The value may be changed by pressing the UP or DOWN button. To save the changed value press the ENTER button. The heating will be permanently turned off when this temperature has been achieved and may only be reset when safe conditions are available. Should nothing be entered within 30 sec the display will change automatically to the text - TEMP. The temperature range is between +3k over the undertemperature level up to -3k from the overtemperature adjustable.
Factory set value: 5°C
Example: LO ALARM = 2°C and HI ALARM = 50°C
SET TEMP changeable between 5°C and 47°C

- **Adjust the HI Alarm Level**

HI ALARM after 1,5 sec HI xxxC
The high alarm temperature will be set here. The high alarm temperature is programmable within the value from the set point +3K up to the top most limit of the temperature setting value. The value may be changed using the buttons UP and DOWN. The ENTER button will be used to confirm the changed values. An alarm will be triggered and signalled should the heating reach this value. The display will automatically change to the Text - TEMP, should there not be any input within 30 sec.

Factory set value: 50°C
Example: SET TEMP = 20°C
The HI ALARM is adjustable from 23°C up to the max. adjustable point

- **Adjust the Low Alarm level**

LO ALARM after 1,5 sec LO xxxC
The lower alarm temperature will be set here. The lower alarm temperature is programmable within the value from –40°C up to set point –3K. The value may be changed using the buttons UP and DOWN. The ENTER button will be used to confirm the changed values. An alarm will be triggered and signaled should the heating reach this value. The display will automatically change to the Text 1 TEMP, should there not be any input within 30 sec.

Factory set value: 2°C
Example: SET TEMP = 20°C
LO ALARM programmable from –40°C up to 17°C

An alarm will only be signaled when the heating temperature has exceeded the commissioning set value.

- **View the actual current**

LOAD CUR after 1,5 sec IL xx.xA
The current draw of the connected heater will be shown. Should the current draw exceed 16A for longer than 6 minutes during a heat phase or should a current flow be measured during a non-heating phase, a fault will be signaled. The display will automatically change to the text - TEMP, should there not be any input within 30 sec.

5.5 Operating ex-box REG/LED

The ex-box LED has no built-in configuration panel and must be set using the ex-control hand held controller pad. The ex-box LED is naturally fully operational without the connected ex-control. The status LED (see Picture 5 “drawing of the ex-box xxx/LED”) can signal the following operation conditions:

- HEATING ON: LED orange
- HEATING OFF: LED green
- ALARM: LED red blinking
- FAULT: LED red
- OVERTEMPERATURE: LED green/red blinking
- UNDERTEMPERATURE: LED yellow/red blinking

The operation of the ex-box LED using the ex-control is described under 0.

5.6 Operating ex-box LIM/DIS (limiter)

The handling is the same as described in 5.4 - Display the actual temperature, - Adjust the heating temperature and - Adjust the HI Alarm Level. All other points are not available on a LIM/DIS. The status messages can be the following

- Priority 1: COM ERR (inner communication is for more than 10s disconnected)
- Priority 2: INT ERR (internal fault, intrinsically safe operation power supply. Unit overheated; current draw not within tolerance, power load will be disconnected)
- Priority 3: LIM OFF (switching off temperature, heating will be permanently switched off)

All alarm signals are displayed on the LED with the value of Text - TEMP and alternate within seconds between the heating temperature. The alarm signal output will be activated in all faults. All faults, except INT ERR will set back automatically. To set these faults back, refer to 0 Resetting error codes.

5.7 Operating ex-box LIM/LED (limiter)

Instead of the ex-box LIM/Dis there is only a LED in the lid of the box. The parameters can be changed by using an ex-control programming device. Possible settings are the same as described in 5.4 - Display the actual temperature, - Adjust the heating temperature and - Adjust the HI Alarm Level. All other parameters are not available. The LED can have the following states:

Normal use	LED green
Alarm	LED rod blinking

In case of using an ex-control with an ex-box LIM/LED the error messages are shown in the ex-control display. (refer to 0

Operating ex-box LIM/DIS)

5.8 Operating ex-control

The ex-control is explicitly foreseen to be connected to, for the programming of, and disconnected from the ex-box LIM/LED or ex-box REG/LED Upon connection of the ex-control to the foreseen unit, “eltherm” appears on the LED Display for one second and then afterwards “ex-box”. The device automatically check on which base device REG or LIM is connected. After connecting the ex-control to an ex-box LIM/LED possible settings are the same as described in 5.4 - Display the actual temperature, - Adjust the heating temperature and - Adjust the HI Alarm Level. In case of ex-box REG/LED all settings listed in 5.4 are possible.



Attention! The plug on the ex-box DIS is not foreseen for the connection of the ex-control. Do not to connect the ex-control to the ex-box DIS. The connection plug on the ex-box DIS is only for the connection of an external serial bus.

5.9 Operating ex-connect

The ex-connect PC-Adapter does not have a programming element. The connection to the serial RS-232 of a PC will be made over a standard 9-pole SUB-D extension cable. The connection to the ex-box DIS units is described in Section 8 Commissioning. The following signal lamps of the ex-connect PC-adapter are arranged as follows:

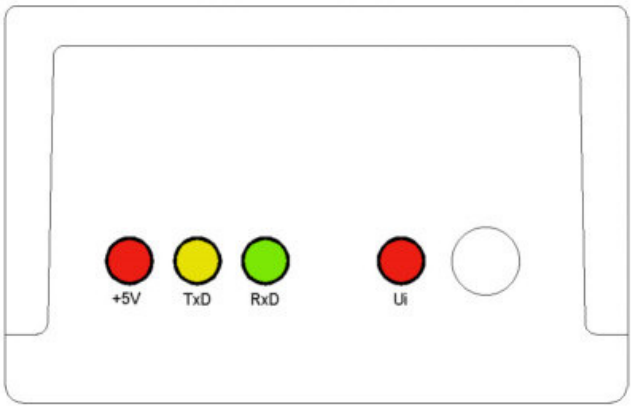

Picture 2 (message options ex-connect)

+5V:	Power supply not intrinsically safe
TxD:	data transmitting active
RxD:	data receiving active
Ui:	Power supply intrinsically safe

5.10 Accessing the extended options

Accessing of the extended functions is possible using either the ex-control or over the integrated operating panel of the ex-box xxx/DIS. The process is identical for both cases:

- The display must show the PT100 sensor temperature, TEMP after 1,5 sec ▓ xxxC (heating on), xxxC (heating off)
- Press all four buttons simultaneously
- Immediately after WAIT appears in the display (not more than 2 seconds later!), release the two inner buttons ENTER and UP while still pressing the outer buttons MENU and DOWN
- Keep pressing the buttons MENU and DOWN until the previous temperature display appears

The unit is now in the extended function mode. When the MENU button is pushed the functions described in 5.4 can be accessed in addition to the functions described in 4. The display will automatically return to the Text - TEMP, should there not be any input within 30 sec.

⚠ Extended optionsare only to be used by schooled technicians. In case of wrong settings, personal injury and or material damage can occur!

⚠ The extended options are only reachable, if the device is not set into keylock! Please refer to - Adjust the keylock to change the keylock state.

5.11 Extended options ex-box REG/DIS

The following texts will be displayed in the order of Picture 3 (overview extended functions) (after text 16 VERSION text 1 TEMP follows):

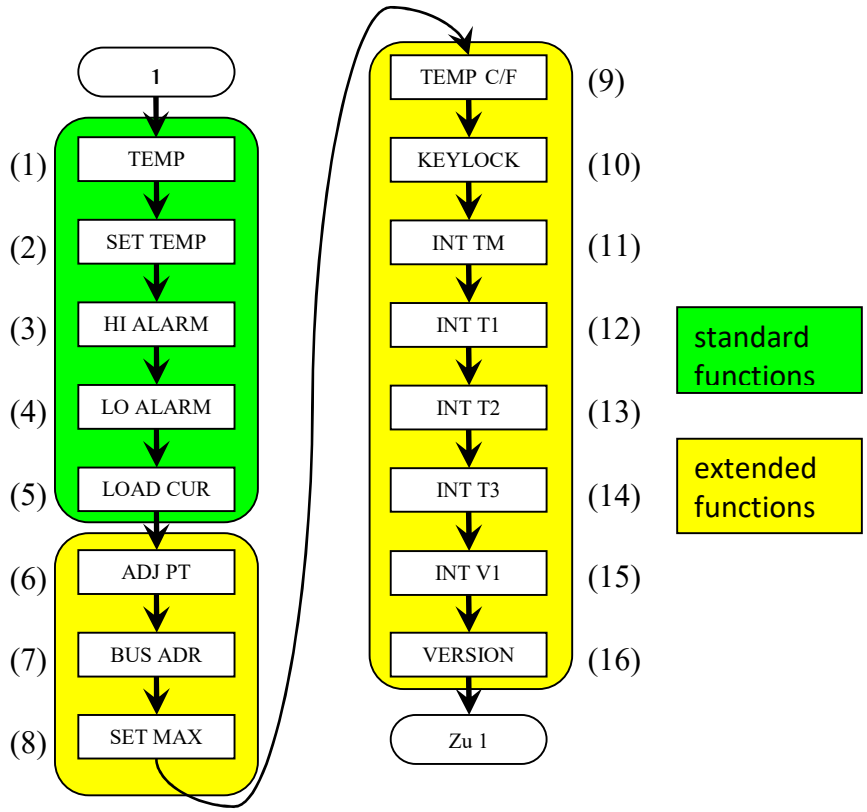

Picture 3 (overview extended functions)

- **View the actual temperature**

(1) TEMP after 1,5 sec ▒ **xxxC** (heating on), **xxxC** (heating off) (refer to 5.4

Operating ex-box REG/DIS)

- **Adjust the heating temperature**
  - **(2) SET TEMP** after 1,5 sec SET xxxC (refer to 5.4

(3) Operating ex-box REG/DIS)

- **Adjust the HI ALARM level**

  (4) HI ALARM after 1,5 sec HI xxxC (refer to 5.4

(5) Operating ex-box REG/DIS)

- **Adjust the LOW ALARM level**

(6) LO ALARM after 1,5 sec LO xxxC (refer to 5.4

Operating ex-box REG/DIS)

- **View the actual current**

(7) LOAD CUR after 1,5 sec IL xxxA (refer to 5.4

Operating ex-box REG/DIS)

- **Adjust a temperature offset**

(8) ADJ PT after 1,5 sec **ADJ xxK** (extended option)

The connected PT-100 sensor may be adjusted to the electronic without opening the unit. In order to do this the temperature on the heating (or PT100) will be measured using a precisions thermometer and the difference of the actual value will be adjusted with the buttons UP or DOWN. The new value will be saved when the ENTER button is pressed. The setting range is between –5K and +5K. The display will automatically change to the Text (1) TEMP, should there not be any input within 30 sec.

Factory set value: 0 Kelvin

Example: TEMP = 20°C
measured Temperature = 18°C
ADJ PT setting –2K

- **Adjust the bus address**

(9) BUS ADR after 1,5 sec **ADR xx** (extended option)

The unit address of the serial bus (current loop) for central management and control of several units. The address 1 to 32 may be set using the UP or DOWN buttons. The value will be saved by pressing the ENTER button. The display will automatically change to the Text 0 TEMP, should there not be any input within 30 sec.



Attention should be made that the address has only been given once.

- **Set max adjustable temperature**

(10) SET MAX after 1,5 sec **MAX xxxC** (extended option)

The high temperature limit of the temperature setting range may be set. This parameter is used to set the high temperature value for the normal operation according to the hazardous area temperature classification. This value may be set from the HI ALARM value up to 300°C. The value may be set using the UP or DOWN buttons. The value will be saved by pressing the ENTER button. The display will automatically change to the Text (1) TEMP, should there not be any input within 30 sec.

Factory set value: 300°C

Example: HI ALARM = 50°C
SET MAX setting from 50°C to 300°C

- **Adjust the temperature unit**

(11) TEMP C/F after 1,5 sec **UNIT x** (extended option)

The temperature unit may be set. The units may be switched between Fahrenheit (F) und Celsius (C) by pressing the UP and DOWN buttons. The value will be saved by pressing the ENTER button. The display will automatically change to the Text (1) TEMP, should there not be any input within 30 sec.

Factory set value: C

- **Adjust the keylock**

(12) KEYLOCK after 1,5 sec **Keylock xxx** (extended option)

With this function it is possible to deactivate the buttons of the device, so unwanted change of parameters is barred. To activate or deactivate this function it is essential to get into the extended function menu. Therefore push the buttons ENTER and DOWN for 20 sec. The changing of the keylock state is displayed with the message OK in the display. Now it is possible the change any parameters of

the device inclusive the keylock option. If there is no input on the buttons for 30s the device will be locked again, if the keylock option was not changed.
Factory set value: off

- **View the inner temperature**

(13) **INT TM** after 1,5 sec **TM xxxC** (extended option)
The factory set internal maximum internal temperature will be displayed. A fault will be registered if the values of **INT T1** or **INT T2** have been achieved.

- **View the sidewall temperature**

(14) **INT T1** after 1,5 sec **T1 xxxC** (extended option)
The first measured internal temperature measurement point will be displayed. The temperature measurement is taken near a side wall of the ex-box located in the floor of the operation panel.

- **View the bottom part temperature**

(15) **INT T2** after 1,5 sec **T2 xxxC** (extended option)
The second measured internal temperature measurement point will be displayed. The temperature measurement is taken from the middle of the floor of the ex-box.

- **View the cap temperature**

(16) **INT T3** after 1,5 sec **T3 xxxC** (extended option)
The second measured internal temperature measurement point will be displayed. The temperature measurement is taken from the cover.

- **View the value of the intrinsically safe power supply**

(17) **INT V1** after 1,5 sec **V1 x.xV** (erweiterte Funktion)**.** The intrinsically safe power supply is displayed.

- **View the software version**

(18) **VERSION** after 1,5 sec **SW Vx.x** (extended option)**.** The software version of the ex-box will be displayed.

5.12 Extended function REG/LED

The parameters can be changed during the same way like the ex-box REG/DIS, but therefore a ex-control is needed. (refer to 5.11

Extended options ex-box REG/DIS).

5.13 Extended function ex-box LIM/DIS

The parameters can be changed during the same way like the ex-box REG/DIS, but the options 3 and 4 are not available (refer to 5.11

Extended options ex-box REG/DIS).

5.14 Extended function ex-box LIM/LED

The parameters can be changed during the same way like the ex-box REG/DIS, but therefore an ex-control is needed and the options 3 and 4 are not available (refer to 5.11

Extended options ex-box REG/DIS).

6. Technical data

6.1 Technical Data Ex-Box xxx/DIS

Supply voltage: 230V ± 10%
Nominal current (box): max. 100mA
Max. heating current: 16A (ohmic)
Ambient temperature: -32°C bis +60°C
Dimensions (LxBxH): 140x140x150mm (without fixing fastener and without elec. fitting)
Weight: 3,0 kg (without fixing fastener)
Protection class: IP65
Alarm message: galvanically separated NOC 100mA (max. 60V DC)
Connection port: current loop serial intrinsically safe, max. 1000m, 1200 baud, 8 bit, 1 stopbit, no Parity Bit (female plug Binder 712)
Measuring sensor: PT100 (RTD) (2- or 3-wire), self intrinsically
Measuring range PT100: -40°C to +300°C
Controlling: Two-point, pulsepacked, zeroswitching triac
Hysteresis ("REG" only): 1 K
Load switching: 2-phase
Electrical fittings: 2x M25 (9 – 13mm; with spec. parts changeable to 11 - 15 mm)
1x M20 (7 – 11 mm with spec. parts changeable 9 – 13 mm, or 3-5mm)
1x vent plug M20

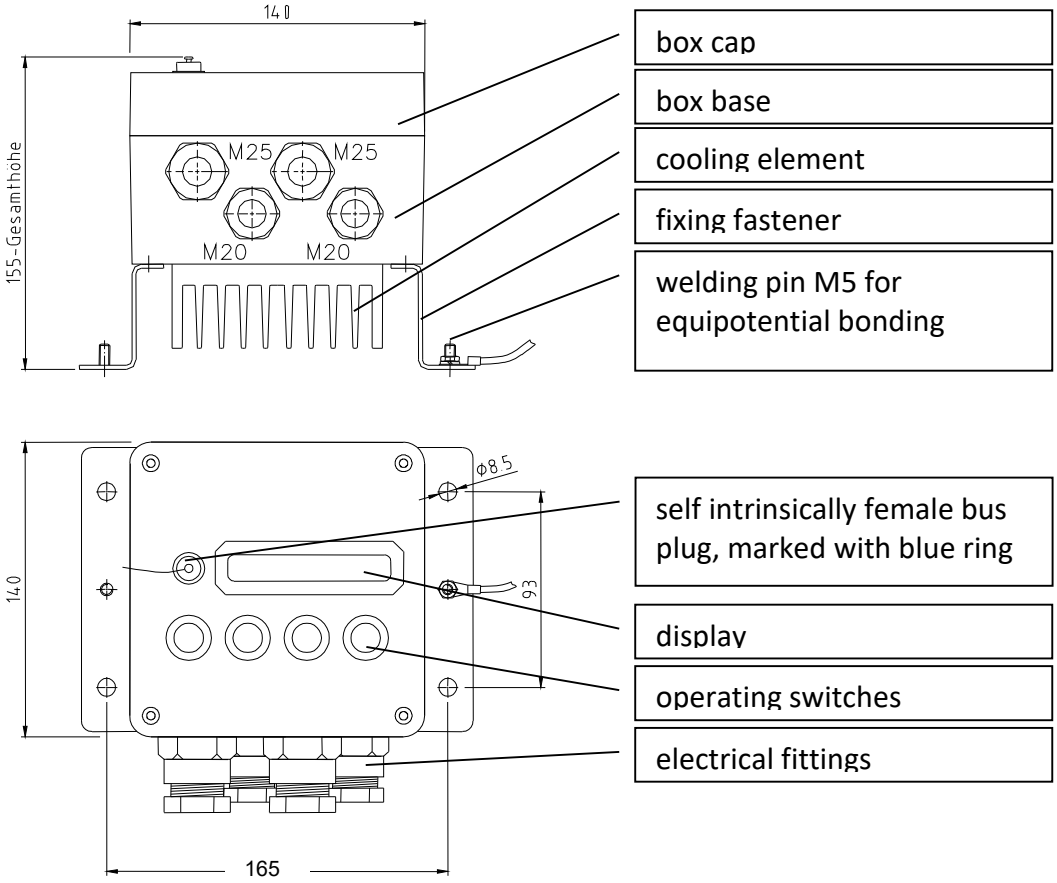

Picture 4 (drawing of the ex-box xxx/DIS)

6.2 Technical Data Ex-Box xxx/LED

Supply voltage: 230V ± 10%
Nominal current (box): max. 100mA
Max. heating current: 16A (ohmic)
Ambient temperature: -32°C bis +60°C
Dimensions (LxBxH): 140x140x150mm (without fixing fastener and without elec. fitting)
Weight: 3,0 kg (without fixing fastener)
Protection class: IP65
Alarmmessage: galvanically separated NOC 100mA (max. 60V DC)
Connection port: current loop serial intrinsically safe, max. 1000m, 1200 baud, 8 bit, 1 stopbit, no Parity Bit (female plug Binder 712)
Measuring sensor: PT100 (RTD) (2- or 3-wire), self intrinsically
Measuring range PT100: -40°C to +300°C
Controlling: Two-point, pulspacked, zeroswitching triac
Hysteresis ("REG" only): 1 K
Load switching: 2-phase
Electrical fittings: 2x M25 (9 – 13mm; with spec. parts changeable to 11 - 15 mm)
1x M20 (7 – 11 mm with spec. parts changeable 9 – 13 mm or 3-5mm)
1x vent plug M20

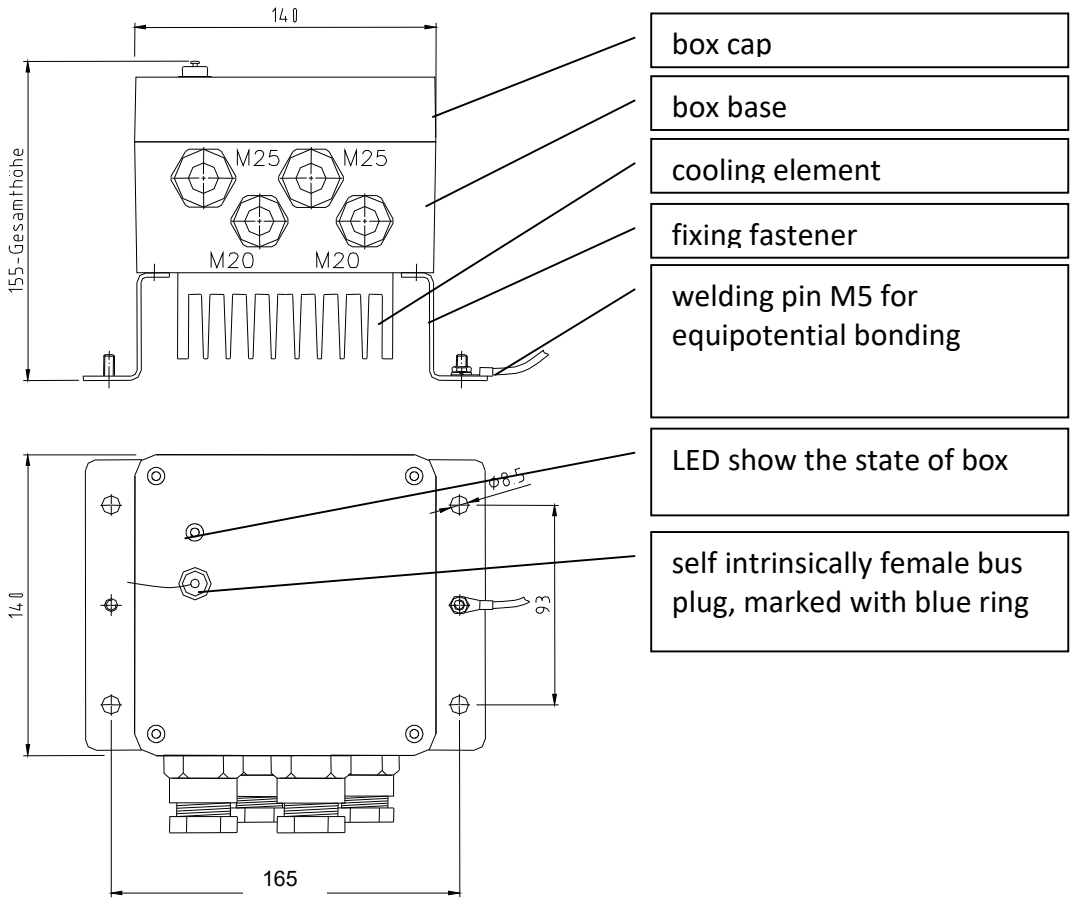

Picture 5 (drawing of the ex-box xxx/LED)

6.3 Technical Data Ex-Control

Supply voltage:	8,2V, intrinsically safe fed from ex-box xxx/LED
Nominal current (box):	max. 50mA
Ambient temperature:	-32°C bis +60°C
Dimensions (LxBxH):	150x85x35mm
Weight:	0,5 kg
Protection class:	IP65
Connection port:	intrinsically safe for ex-box xxx/LED

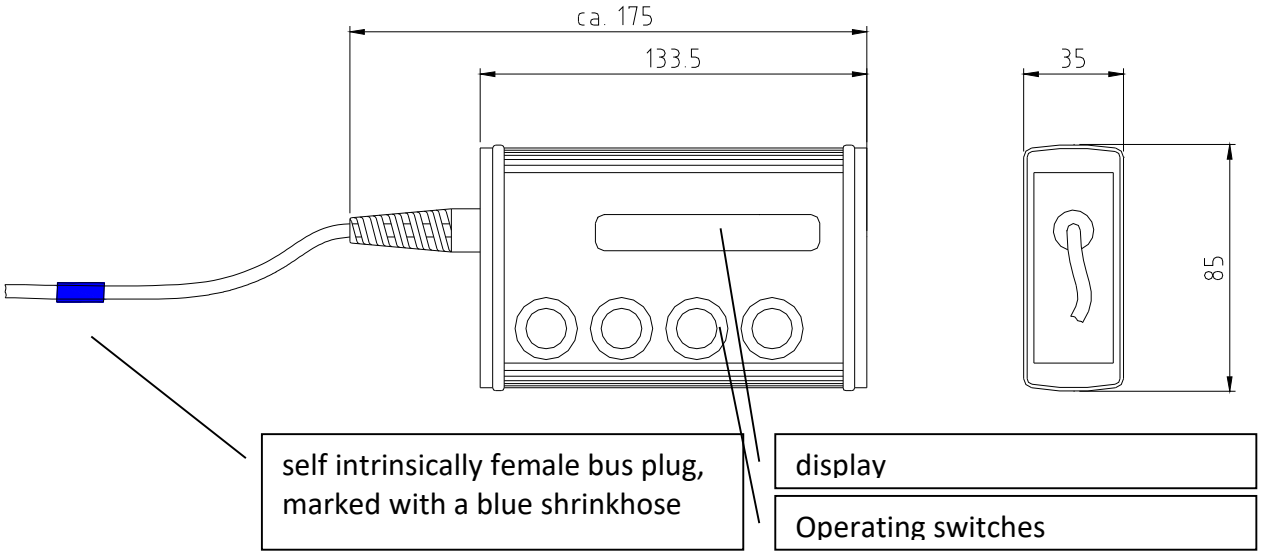

Picture 6 (drawing of the ex-control)

6.4 Technical Data Ex-Connect

Supply voltage:	230V ± 10%
Nominal current (box):	max. 100mA
Ambient temperature:	-20°C bis +40°C
Dimensions (LxBxH):	190x110x70mm
Weight:	0,8 kg
Protection class:	IP20
Connection port PC:	RS-232 9-pole (jack)
Connection port ex-box:	current loop serial intrinsically safe, max. 1000m
Intrinsically safe limit values:	Uo_{max} = 7,9V
	Io_{max} = 244mA
	Po_{max} = 1,12W
	Lo_{max} = 400µH
	Co_{max} = 1,0µF

7. Mounting / Demounting

7.1 Ex-Box DIS, Ex-Box REG/xxx and Ex-Box LIM/xxx

The ex-box DIS, ex-box REG/xxx and ex-box LIM/xxx are supplied with mounting brackets for wall or pipe installation. The mounting brackets are designed so that the cable entries are to be pointed downward.



The following is to be taken into account when choosing the installation area:

- Supply voltage of 230VAC must be available
- Circuit breakers of 16 A (or MCB) must be integrated to the supply voltage of the Ex-Box
- The supply cables are to be fix installed and with strain relief on site, through the customer
- Operation is to follow according to the allowed ambient temperatures
- Operation is to follow according to the IP protection
- The cooling fins are not to be covered or blocked
- Refrain from operation in direct sunlight
- Protect the unit against vibration
- Protect the unit against aggressive chemicals



Housing cover may only be removed when no voltage is available. Explosion Danger!



Only use heat resistance (T max > 100°C) power supply cables because the unit may heat up under circumstance.



Pt 100 sensors without ATEX certificate can be used if they fulfill the requirements of EN 60079-11 paragraph 5.7. Be sure that the cable is marked with a blue shrinkhose to indicate intrinsic safety. The blue shrinkhose is included in the shipment. The length of the PT100 connector cable should be less than 200m! Be sure that the cable is installed straight without coiling. If the connected length is longer than 200m the precision of the measured value degrades. The intrinsic safety will not be changed by increasing the length of the connection cable.



The connected resistor at terminals 9 and 10 must not be removed, regardless of the operating mode.



The Unit may only be opened by schooled electricians and only in accordance to valid regulations. Every modification of the unit is forbidden.

The cover must be opened for the installation and removal of the unit. The four visible cross cut bolts must be loosened in order to remove the cover. The electrical cabling is described in Section 8 Commissioning The ex-control is a hand held controller pad that has not been designed for permanent installation.

7.2 Mounting and demounting of Ex-Box Ex-Connect

The ex-connect PC-Adapter may only be operated in **non-hazardous** areas. The Unit is designed for constant operation and does not require a power supply. The installation area of the unit should be near the connected PC. The air slots on the side of the unit are not to be covered or blocked.

The following is to be taken into account when choosing the installation area:

- The max. ambient temperature is observed
- The IP-protection class is observed
- Prevent the devices from direct sun
- Prevent the devices from vibrations
- Prevent the devices from abrasive chemical substances

Only a schooled electrical technician (from the customer) may open the device acc. to the regulations. Any modification of the device is strongly not allowed!

8. Commissioning

8.1 Commissioning the ex-box as a single device

After the ex-box is mechanically safe installed and the housing cover has been loosened (refer to 7 Mounting / Demounting), please check if the power supply is without voltage. The foreseen circuit breaker, **max. 16A**, may be installed

in safe area with VDE standard circuit breaker (also resettable) with a corresponding explosion protected (Ex-d housing, etc.) in hazardous (Ex) area:

Protect the connection cables, especially the power supply cable, against possible damages.

Place the connection cable through the smallest entry and between the connection block 6 and 7 when using a 3-wire sensor. Connect the cable ends to connection block 9 (voltage incoming), 10 (current outgoing) and 11 (collected ground). Terminate the cable ends to the connection block 10 and 11 when using a 2-wire sensor. A sensor shield wire may be connected to the housing with the supplied cable boot. The heating cable is to be pulled through the middle cable entry. Connect both of the 230V buswires to the connection blocks 7 and 8 and then the earth braid to connection block 6. The wire cross section may be between 1.5mm² and 4 mm².

Only ohmic resistance heaters with up to 16A current may be operated. The max. heating circuit lengths are to be followed according to the corresponding data sheet when operating self-regulating heating cables!

An external alarm signal unit may be connected to the blocks 1(+) and 2(-) should it be desired. The outgoing alarm signal is sent over a passive close switch and allows a max. voltage of 60VDC by a max. switching current of 100mA.

Upon completion, place the power supply cable through the largest entry and then connect the 230V power supply to the blocks 3 (PE), 4 (N) and 5 (L). The cable wire cut dimension may be between 1.5mm² and 4 mm².

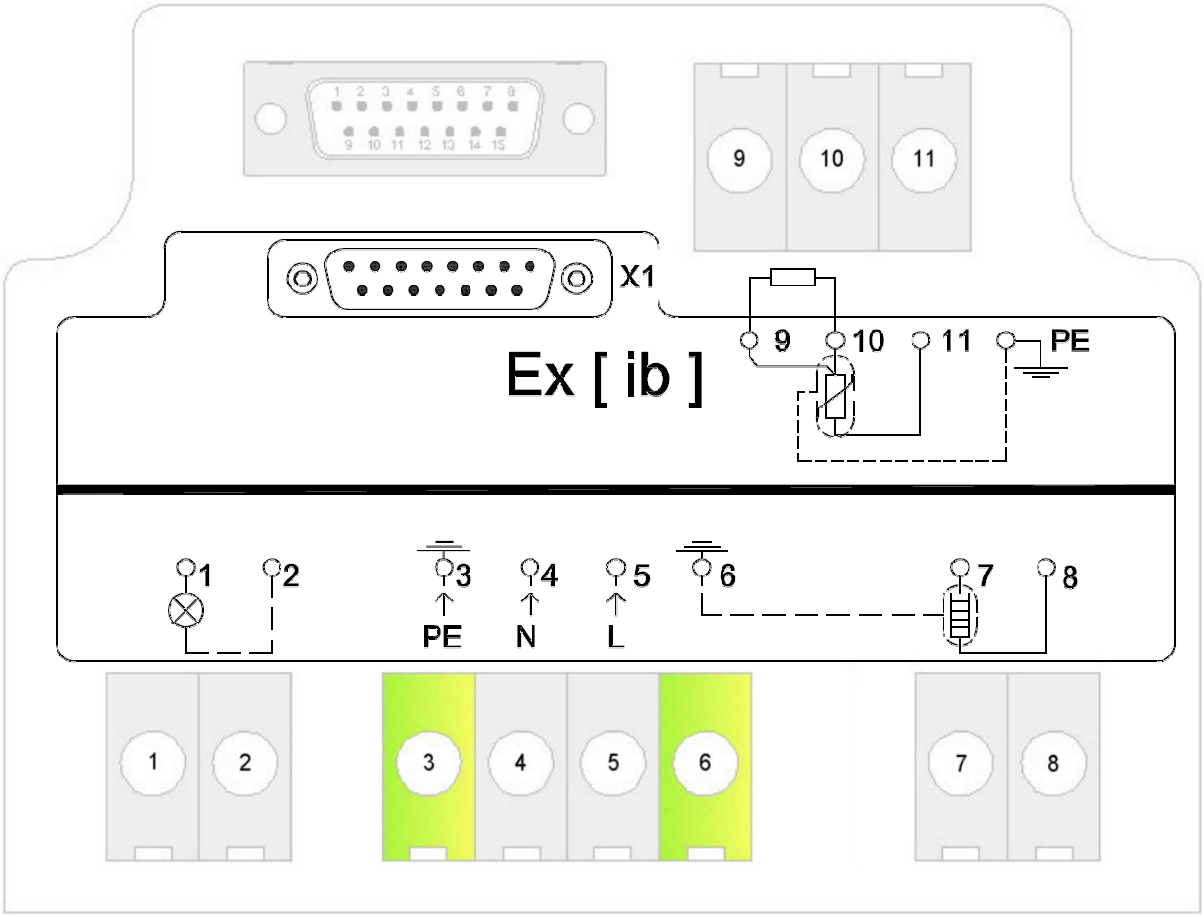

Picture 7 (elec. Circuit diagram ex-box LIM/xxx and REG/xxx)

Replace and secure the housing cover with the four cross cut bolts on to the housing. Control the unit to ensure that the cable entries are correctly tightened and correctly sealed (please refer to separate cable entry instructions), and the cover for correct, secure installation. If necessary, tighten the cover screws or cable entries. Unused cable entries must be sealed using an explosion protected certified blind (1 ea. has been included with the delivery).

Ensure that the temperature sensor is securely installed at the owner's prescribed installation point before taking into operation.

The unit is now ready for operation. The unit will be set into operation by placing the circuit breaker into the "ON" position and the parameters may now be set.

Attention: the parameters are to be set according to the owners specifications (especially the temperature set point) in order to ensure the explosion protection.

8.2 Commissioning ex-box as limiter/controller combination

The power supply to the ex-box LIM, as described under 0
Commissioning the ex-box as a single device, is to be connected first. The ex-box LIM, connection block 7 and 8, will then be connected to the ex-box Controller. The hating will be connected to the ex-box Controller as described under 0.

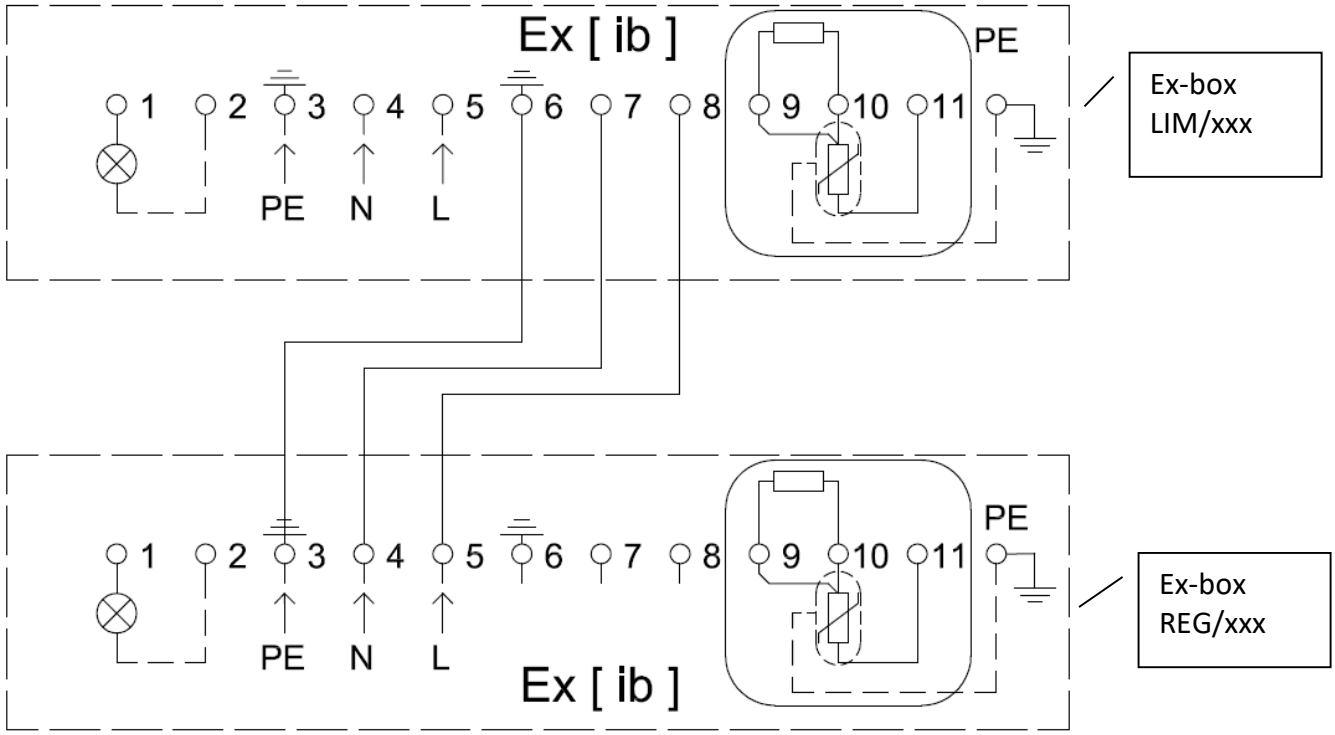

Picture 8 (elec. Circuit diagram ex-box LIM/xxx combined with ex-box REG/xxx)

8.3 Commissioning Ex-Connect

The ex-connect PC-Adapter will be connected from the non-intrinsically safe side to the COM interface (RS-232) of the PC using a serial extension cable. The cabling to one or more ex-box DIS units is installed using a connection cable, 2x2 wound blue (marking for intrinsically safe) wire. The wound blue cable may not exceed 0.1 Ohm/meter or a capacity of 100 pF/meter. The maximum total length of the entire cable for safely sending the data is 1 Kilometer. The connection of more ex-box DIS units (max. 32) follows through parallel connection of all four buswires. The first two wire pairs are on Pin 1 and 2 of the 5-pole connection plug, type Binder 712, and the second pare are on Pin 4 and 5.

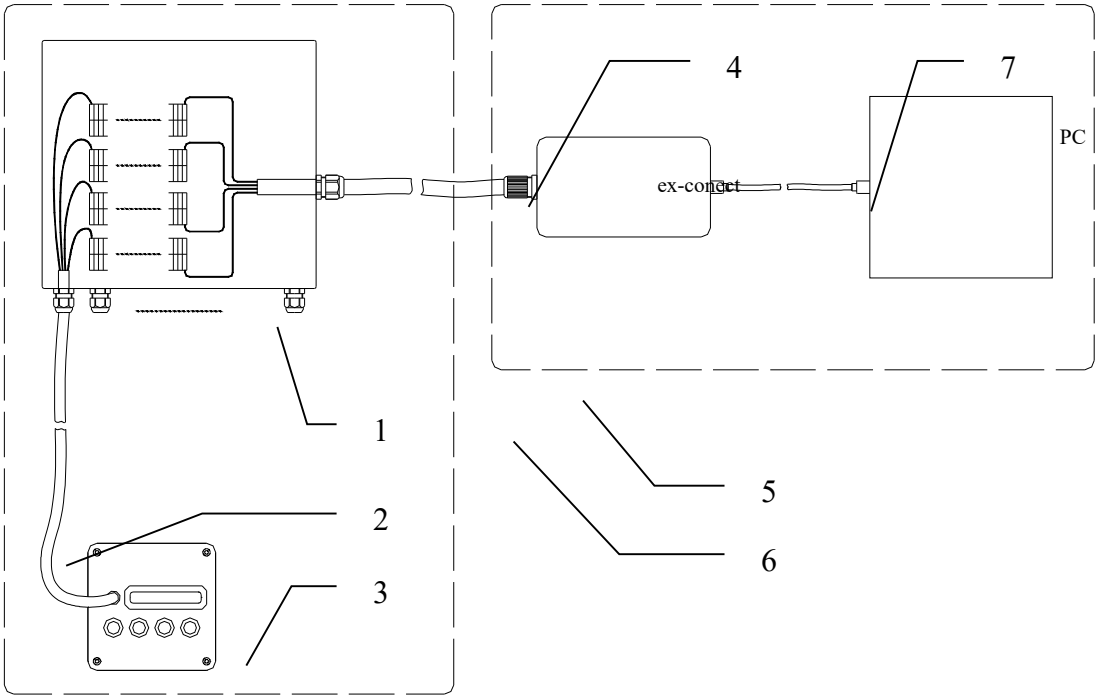

Picture 9 (Overview in case of using the bus system)

1. box (provided by customer) with up to x32 K terminals(32 terminals for PIN 1 -4, linked together)
2. connection wires of ex-boxes cable 2x2 with Binder 712 male plug (length y m, max. 0,1 Ω/m max. 100 pF/m
3. up to 32 ex-boxes connectable
4. connection between ex-boxes with ex-connect - cable 2x2 with Binder 712 male plug (length y m, max. 0,1 Ω/m, max. 100 pF/m)
5. non hazardous area
6. hazardous area

The overall length of x+y must not be greater than 1000m!

The connection of cables may only be made by schooled electricians and only in accordance to valid regulations. Protect the connection cables, especially the power supply cables, from possible damages.

8.4 Installation advice for intrinsically safe circuits

The EX-Box system have several electrically interfaces which are intrinsically safe, those are:

- sensor circuit (RTD)
- interface circuit
- supply circuit for cap with display

8.5 Intrinsically safe sensor circuit (RTD)

The sensor circuit (supply cable from the sensor) should be marked as intrinsically safe with a blue shrink hose, which is delivered with each ex-box device, by the installer. Furthermore there is a sign in the device describing the safe intrinsically of the area in the ex-box unit. Please refer to para. 8 Commissioning).

8.6 Intrinsically safe interface

The interface circuit – consisting of the female connector in the caps of the controllers/limiters as well as the connector in the PC connect – is marked as safe intrinsically by a blue ring around the female connector. The safe intrinsically marking of the EX-Control is made by a blue shrinkhose on the supply cable. If an PC connect is used to monitoring, the customer is bound to made the marking of intrinsically safe of the circuits! Please refer the the picture shown on para. 8.

8.7 Intrinsically safe supply

The supply circuit of the lid is normally not reachable because the lid is mounted to lower part of the ex-box enclosure. The connection is made by a plug which is named X1. The marking is printed on a sticker in the base of the device. Please refer the picture shown on para. 8.

8.8 Maintenance

The ex-box series are modern high technology and maintenance free units. It is however recommended that visual inspection regarding the correct tightness of cable entries, against any mechanical damage, and eventual alarm signals (using the ex-control) be made and documented at regular intervals. Damaged units may not be taken into operation and are to be replaced. The instructions under part 7 Mounting / Demounting and 8 Commissioning are to be followed should the housing or cable entries required to be opened. Do not use any aggressive (acid) or turpentine products for cleaning of the units. An adjustment of the PT100 to the electronic as described in part - Adjust a temperature offset must not be made for safe operation of the unit, but it will help to increase the control exactness of the ex-box under extreme operation conditions.

9. Factory Settings

List of Parameters
Ex-Box Controller, Ex-Box Limiter

Date:	
Order:	
Customer:	

Controller

Quantity	Item No.

		preset	custom
maintain temperature	Set Temp. [Set]	5°C	
High temp. Alarm	Hi Alarm [HI]	50°C	
Low temp alarm	LO Alarm [LO]	2°C	
PT100 offset	ADJ PT100 [ADJ]	0 Kelvin	
Bus address	Bus Adr. [ADR]	1	
Key lock	Keylock	Off	
Upper limit temp settings [1]	Set max. [Max]	300°C	
Software version		2.3	
Temperature units	Temp C/F [Unit]	Celsius	0

Limiter

Quantity	Item No.

		preset	custom
temperature limit	Set Temp. [Set]	5°C	
PT100 offset	ADJ PT100 [ADJ]	0 Kelvin	
Upper limit temp settings [1]	Set max. [Max]	300°C	
Key lock	Keylock	Off	
Software version		2.3	
Temperature units	Temp C/F [Unit]	Celsius	

Are deviations from preset values required?