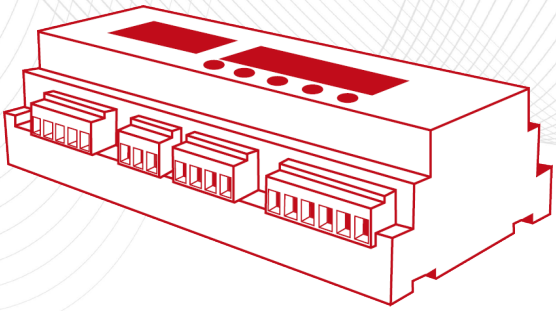

Operating Instructions

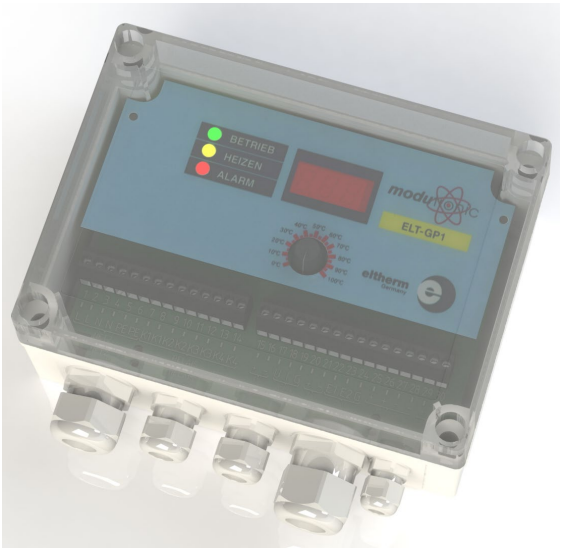

for
Temperature Controller ELT-GP1
(Part No. 008Q520)

eltherm GmbH Ernst-Heinkel-Str. 6-10 57299 Burbach T.: +49 2736 4413-0 F.: +49 2736 4413-50 info@eltherm.com	86500010 BU-020	**Operating Instructions for** Temperature Controller ELT-GP1
	Revision 6 86500010	08.01.2020

Contents

1. Product Description 3
1.1 Function 3
1.2 Control and Display 3

2. Technical Data 4
2.1 Terminal Connection Plan 4
2.2 Terminals: Explanation 5

3. General Safety Instructions 6
3.1 Proper use 6
3.2 Hazards of electrical power 6
3.3 Modifications to the temperature controller 6

4. Installation 7
4.1 Mounting 7
4.2 Installation 7

5. Settings and Operation 8
5.1 Setting the temperature set-point (Target Temperature) 8
5.2 Setting the bottom and top temperature limits (Low Limit and High Limit) 8

6. Optional Features 9
6.1 Other housing designs 9
6.2 Digital temperature display (ELT-ONA) 9
6.3 Analogue Output (ELT-OAA) 9
6.4 Factory Optional Features 10
6.5 Analogue Output , Option ELT-OAA 10
6.6 External Set Point 10



Please read this manual carefully before using this product. Warranty claims cannot be considered in case of damage caused by failure to comply with these operating instructions! This documentation was compiled with utmost care, however, we cannot guarantee for its correctness in every respect.



Instructions for use and useful or important information.



Immediate hazard which can lead to death, serious injury or considerable material damage.

This User's Manual is intended to familiarize you with the product, the safety instructions, mounting and installation, operation and setting, and any optional features.

Contents subject to change. ELTHERM GmbH accepts no liability for any errors in this documentation.. No liability whatsoever will be accepted for damage incurred in direct connection with the supply or use of this documentation, unless there is a legal obligation. Disclosure and copying of this document and the use and divulgence of its contents are not permitted , unless expressly authorized. Failure to comply will result in liability for damages. All rights in respect of a patent or registered trademark being granted reserved.

1. Product Description

1.1 Function

In control and monitoring mode, the unit regulates connected heaters to a given set-point (i.e. target temperature). Monitoring is done based on preset temperature limits. If a limit is exceeded or is not reached, potential-free contacts are switched (K3). The unit can be configured for four different types of controller in the factory.

1.2 Control and Display

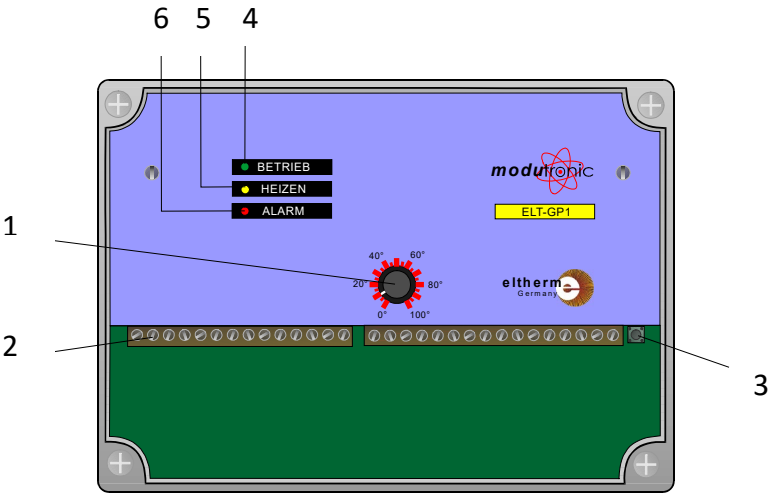

Fig. 1: Control and display

Pos. 1: Potentiometer for adjusting the set-point.
Pos. 2: Terminal strip for all inputs and outputs (see chapter 2.4 **'Terminal Connection Plan'**).
Pos. 3: Control key:
To switch the display from actual to target (set-point) value (if optional display is present).
To input the bottom temperature limit (Low Limit) and the top temperature limit (High Limit) for the permissible actual temperature.
Pos. 4: LED 'Operation'. Lights up green when input voltage is present.
Pos. 5: LED 'Heat'. Lights up yellow when the heater is switched on.
Pos. 6: LED 'Alarm'
Lights up red when there is a fault at the temperature probe.
Flashes if the preset temperature limit is exceeded or is not reached.

The LED´s 'Heat' and 'Alarm' have another meaning when adjusting the set-point (refer to chapter 5 **'Settings and Operation'**).

2. Technical Data

Mains voltage:	230 V, 50 Hz
Power consumption:	max. 5 VA
Temperature measuring range:	-51°C to +870°C
Controller range:	0°C to 200°C (standard configuration)
Hysteresis	2 K
Accuracy: with Pt100: with thermocouple type K: with thermocouple type J:	 ±(0.5°C+0.5% of meas.r.) ±(1.0°C+1.0% of meas.r.) ±(1.5°C+1.5% of meas.r.)
Resolution (internal):	0.1°C (Pt100) 0.4°C (thermocouples)
Meas. current (Pt100):	approx. 0.75 mA
Controller cycle time:	approx. 1.2 s
Housing:	Plastic-walled housing with transparent cover, Pg-cable gland
Int. protection	IP 67
Ambient conditions:	0°C to 50°C, max. 90% rel. humidity (non-condensing)
Dimensions:	180 x 130 x 75 mm (W x H x D)
Connections:	30 cage pull-terminal screws à 2.5 mm²
Inputs:	(see chapter 2.4 Terminal Connection Plan)
Outputs:	(see chapter 2.4 Terminal Connection Plan)
Interface:	(see chapter 2.4 Terminal Connection Plan)

2.1 Terminal Connection Plan

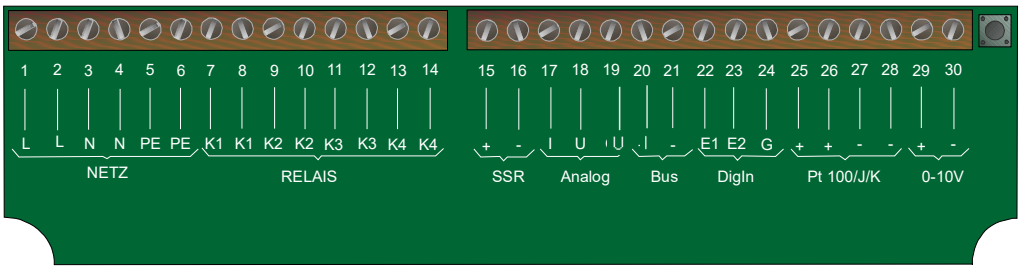

Fig. 2: Terminals

The controller can be configured for various types of controllers in the factory. Depending on the type of controller, the outputs may have different functions. The following types of controller are available from the factory:

- 2-position controller (conventional or PID) with hysteresis (normal case)
- PID-controller with PWM (= Pulse-Width-Modulation) output (quasi-continuous)
- PID-continuous controller

Where there are differences in the outputs, you will find the abbreviations ‘2-position’, ‘PID-PWM’ and ‘PID-cont.’ in Table 1.

2.2 Terminals: Explanation

Terminal No.	Name	Meaning
1	L	Mains connection for the unit (phase conductor).
2	L	Second "L" terminal. Possible use: The heater is to be connected directly to the unit. In this case: Jumper from 2 to 7.
3	N	Mains connection for the unit (neutral conductor).
4	N	Second "N" terminal. Possible use: The heater is to be connected directly to the unit. In this case: A) Without using the second load relay K2 (normal case): Connect the heater at terminals 4 and 8. B) With use of the second load relay K2 (e.g. for BeNeLux countries): jumper from 4 to 9 and connection of the heater at terminals 8 and 10.
5	PE	Mains protective conductor.
6	PE	Second "PE" terminal, e.g. for connecting the protective conductor for the heater.
7 (2-position)	K1	Contacts 7 + 8 as normally open contacts. Input of load relay K1, max. 16A / 230VAC. Phase connection from mains.
8 (2-position)	K1	Contacts 7 + 8 as normally open contacts. Output of load relay K1, max. 16 A / 230VAC. Phase connection of heater.
7,8(PID-PWM) (PID-cont.)	K1	Contacts 7 + 8 as normally closed contacts, max. 16 A / 230VAC. Open when the preset high temperature limit is exceeded (High Limit).
9 (2-position)	K2	**Optional**, if the phase and neutral conductors are to be switched (e.g. BeNeLux countries): Contacts 9 + 10 as normally open contacts. Input of load relay K2, max. 16 A / 230VAC. Neutral conductor from mains.
10 (2-position)	K2	**Optional**, (see above). Contacts 9 and 10 as normally open contacts. Output of load relay, max. 16 A / 230VAC. Neutral conductor of the heater.
9,10 (PID-PWM) (PID-cont.)	K2	**Optional**, see: 7,8 (PID-PWM) (PID-continuous)
11, 12	K3	**Optional**. Contacts 11 + 12 as normally closed contacts, max. 8 A / 230VAC. Open in case of probe breakage or probe short (in the case of a Pt100) and for probe interruption (in the case of a thermocouple). Also open when the preset high temperature limit is exceeded or the preset low temperature limit is not reached.
13, 14	K4	**Optional**. Contacts 13 and 14 as normally closed contacts, max. 8 A / 230VAC. Opens when the preset high temperature limit is exceeded (High Limit).
15,16(2-position)	+, -	SSR-output, 12V, max. 30 mA for connection of a solid state relay for heater ON / OFF.
15, 16 (PID-PWM)	+, -	SSR-output, as PWM (Pulse-Width-Modulation) -signal, 12V, max. 30 mA for connection of a solid state relay
15, 16 (PID-cont.)	+, -	not used.
17 (2-position) (PID-PWM)	U	**Optional**. Electrically isolated analogue output, Voltage: 0 - 10V (between terminals 17 and 19), proportional to the actual temperature, referred to the preset control range, Max.power: 250 mW.
18 (2-position) (PID-PWM)	I	**Optional**. Electrically isolated analogue output, current drain: 0 - 20mA (between terminals 18 and 19), proportional to the actual temperature, referred to the preset control range. Max. output: 250 mW.
17 (PID-cont.)	U	**Optional**. Electrically isolated analogue output as manipulated variable, Voltage: 0 - 10V (between terminals 17 and 19). 5V would e.g. correspond to half power.
18 (PID-cont.)	I	**Optional**. Electrically isolated analogue output as manipulated variable, current drain: 0 - 20mA (between terminals 18 and 19). 10mA would e.g. correspond to half power.
19	G	Common reference potential for terminals 17 and 18.
20	+	Electrically isolated bus interface. Pay attention to polarity to avoid communication error.
21	-	see above
22	Digital In E1	**Optional**. Electrically isolated digital input, voltage: 10 - 30VDC (at terminals 22 and 24) Function: External controller enable: If voltage is present: controller is in automatic mode. If no voltage is present: controller is in standby mode (i.e. heater is not being supplied with current, it is just being monitored).
23	Digital In E2	No function at present.
24	G	Common reference potential for terminals 22 and 23.
25	+	Pt100 , two-wire system: terminals 26 and 27, jumper between 25 and 26 and between 27 and 28.
26	+	Pt100 , three-wire system: jumper between 25 and 26, left connection to 26, right pair to 27 and 28.
27	-	Pt100 , four-wire system: left pair to 25 and 26, right pair to 27 and 28.
28	-	Thermocouple, type J or K: terminals 26 (+) and 28 (-).
29, 30	+, -	Set-point input, voltage: 0 - 10VDC. Function: External set-point adjustment. The applied voltage must be proportional to the temperature set-point (target temperature), referred to the preset control range.

Table 1

3. General Safety Instructions

3.1 Proper use

In its standard configuration, the temperature controller ELT-GP 2 is a two-position controller used to control electric heaters. The controller also indicates temperature deviations of the heater and any faults which may occur in the temperature probes used for this purpose. Any other use above and beyond that is deemed improper use. Your temperature controller is state of the art and has been built in compliance with recognized safety regulations. Its assembly and use can nevertheless constitute a hazard to persons or cause impairment of the unit and other material damage. The temperature controller must only be used when it is in technically perfect working order, for the purpose for which it is intended, in awareness of all safety and hazard aspects and in compliance with the information given in the User's Manual.

3.2 Hazards of electrical power

Work on electrical equipment must only be done by a qualified electrician or by duly trained personnel under the instruction and supervision of a qualified electrician, in accordance with all applicable electrical standards and regulations.

3.3 Modifications to the temperature controller

Do not modify the equipment or the software without the manufacturer's prior authorization. Failure to comply will render all warranty claims null and void and we cannot give any guarantees for trouble-free operation of the controller.

4. Installation

4.1 Mounting

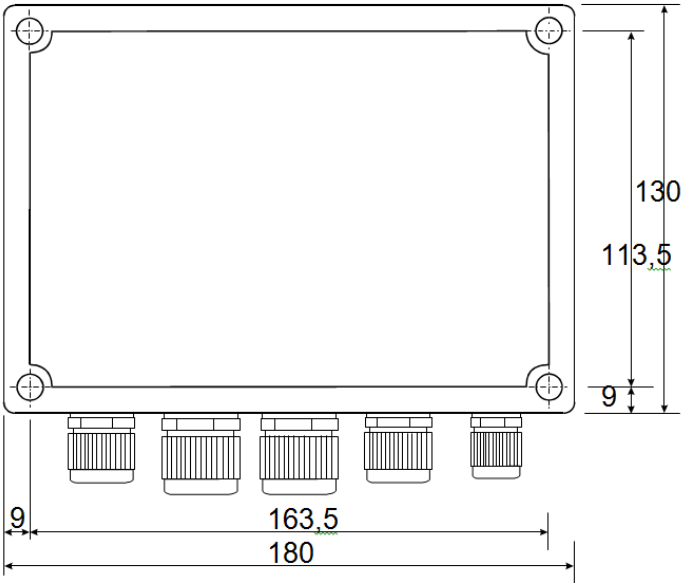

The housing is designed for wall mounting. Drill four holes, ∅ 4 mm, using the mounting template. Attach housing with screws (not included). Glands are directed downwards.

4.2 Installation

Read chapter 3 **'General Safety Instructions'** carefully prior to installation.

MORTAL DANGER!
Before connecting the mains lead, you must switch off all power to the complete control cabinet!

First connect the ground conductor (green-yellow colour-coding) to the unit. Then connect the live wires. Connect all necessary conductors (see chapter 2.4 **'Terminal Connection Plan'**).

Before putting the unit into operation, check that all contact screws at the terminal strips are tight!

5. Settings and Operation

All position numbers given here refer to Figure 1 in chapter. 2.2 **'Controls And Displays'.**

5.1 Setting the temperature set-point (Target Temperature)

- With the help of a screwdriver, or similar, briefly tap the control key (**Pos. 3**). The controller is now in setup mode for the setting the set-point
- Adjust the set-point by turning the potentiometer (**Pos. 1**).
- Tap the control key (**Pos. 3**) again to take over the set-point which you have just set.

The turning range of the potentiometer corresponds with the preset temperature control range. **Example:** Temperature range: 0°C – 200°C; Left limit stop of the poti: 0°C; Right limit stop of the poti: 200°C

5.2 Setting the bottom and top temperature limits (Low Limit and High Limit)

The temperature limits are set by means of a touch-combination of the control key **(Pos. 3)**. Whilst setting is being done, the two bottom LED`s ('HEAT, ALARM'; **Pos. 5 and 6**) indicate the respective setting status. Setting is done as follows:

- Press the control key (**Pos. 3**) for approx. 3 seconds. The controller switches to limit input mode.
- When the input mode is active, the two bottom LED`s (**Pos. 5 and 6**) light up.
- Press the control key (**Pos. 3**) briefly. The LED 'HEAT' (**Pos. 5**) lights up continuously and the LED 'ALARM' (**Pos. 6**) flashes.
- Set the bottom temperature limit (Low Limit) by turning the potentiometer (**Pos. 1**).
- Press the control key (**Pos. 3**) briefly. The limit which has been set (Low Limit) is automatically stored by the controller.
- The LED 'HEAT' (**Pos. 5**) now flashes and the LED 'ALARM' (**Pos. 6**) lights up continuously.
- Now set the top temperature limit (High Limit) by turning the potentiometer (**Pos. 1**).
- After setting, press the control key (**Pos. 3**) again briefly. Both LED`s ('HEAT, ALARM', **Pos. 5 and 6**) light up continuously.
- The controller is now in input mode for inputting the temperature set-point. After setting the temperature limits, the set-point has to be reset (see chapter 5.1 **'Setting The Temperature Set-Point'**).
- Tap the control key (**Pos. 3**). again briefly. The newly set values are now stored and taken over by the controller. The controller has now returned to control and monitoring status (normal status).

Whilst setting is being done, the controller continues to work in control and monitoring mode.

After you have set the temperature limits, monitoring of the bottom temperature limit (Low Limit) is stopped until the actual temperature initially reaches the bottom temperature limit (Low Limit) or exceeds.

6. Optional Features

6.1 Other housing designs

Another housing model is available for ELT-GP1 for connection of heaters with two cold ends, which has the necessary Pg-cable glands.

6.2 Digital temperature display (ELT-ONA)

The three-digit temperature display is limited to a range of -51 to +870 °C .
The following settings are displayed with the digital display module:

- Actual temperature of the heater.
- Temperature set-point and bottom (Low Limit) or top (High Limit) temperature limit in the respective setting mode of the controller (see chapter 5 **'Settings And Operation'**).
- Error messages:

Digital display flashes:	Bottom or top temperature limit (Low Limit, High Limit) not reached or exceeded respectively.
E01:	Short in the temperature probe (for Pt100 only)
E02:	Conductor broken in the temperature probe

Install the digital temperature display as follows:



Before you install the digital temperature display in the controller, disconnect the controller from the power supply.

- Remove the transparent cover of the housing.
- Screw the front plate off the controller.
- Insert the additional PCB in the space provided for it (**see Fig. 4**). Proceed with extreme caution when doing so. Make sure that none of the plug connections are bent or damaged.
- After putting it into place, secure the PCB with locking screws at the threaded bolts provided for this purpose on the PCB.
- Now screw the new front plate with window onto the controller.

6.3 Analogue Output (ELT-OAA)

When retrofitting an analogue output, we will supply you with the required plug-in board.



To install the plug-in board, proceed as described in chapter 6.2 **'Digital Temperature Display'**!

After installation, the connections are active for analogue output (Terminals 17, 18 and 19, see **'Terminal Connection Plan'**).

6.4 Factory Optional Features

Depending on where it is to be used, we can supply the controller not only as a 2-position controller but also in the following configurations:

Controller Configuration	Function
PID-2-position	PID-two-position controller with hysteresis
PID-PWM	PID-controller with pulse width modulation output (0....7/7, 200 ms)
PID-continuous	PID-controller with continuous output (0-10V/20mA)
Configuration of the temperature range (can be preset in the factory if required)	0°C - 100°C 0°C - 400°C 0°C - 800°C

The controller can be additionally equipped from the factory with a further load relay (K2) and two additional signal relays. Refer to the terminal connection plan for the meanings of these relays.

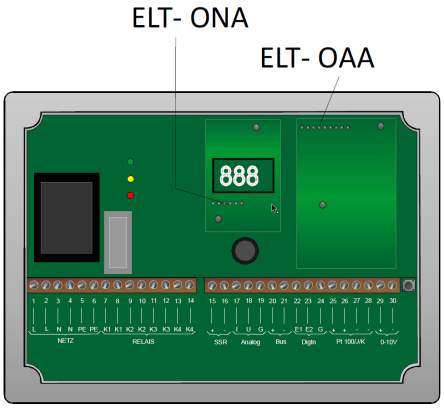

6.5 Analogue Output , Option ELT-OAA

Connection of passive current output 0/4-20mA to passive PLC analogue input:

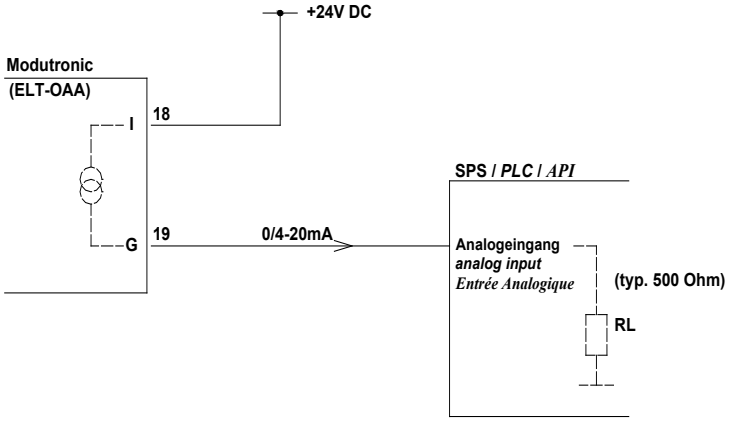

6.6 External Set Point

The entry of the external set point changes automatically, depending on the signal chosen with the analogue output.

Analogue output	External set point
0-20 mA	0-10 V
4-20 mA	2-10 V

A 500 Ohm shunt can be added externally to achieve a 4-20mA signal.