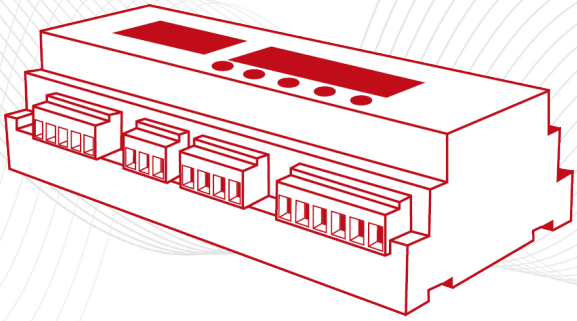

Operating Instructions



Temperature Controller and Limiter
ELT-GP3
(Part No. 0611041)

eltherm GmbH Ernst-Heinkel-Str. 6-10 57299 Burbach T.: +49 2736 4413-0 F.: +49 2736 4413-50 info@eltherm.com	86500004 BU – 018	**Operating Instructions** **Temperature Controller & Limiter ELT-GP3**
	Revision 6	20.12.2018

Contents

1. Product Description 3
1.1 Function 3
1.2 Controls and Display 3

2. Technical Data ELT-GP3 (Controller and Limiter identical) 4
2.1 Terminal Connection Plan (Identical for controller and limiter) 4
2.2 Terminal No. Explanation 5

3. General Safety Instructions 6
3.1 Proper Use 6
3.2 Hazards Of Electrical Power 6
3.3 Modifications To The Temperature Controller 6

4. Mounting and Installation 7
4.1 Mounting 7
4.2 Installation 7

5. Settings and Operation 8
5.1 Setting The Temperature Set-Point (Target Temperature) 8
5.2 Setting Bottom and Top Temperature Limits (Low Limit and High Limit) 8
5.3 Limiter Operations 9

6. Optional Features 9
6.1 Digital Display (ELT-ONA) for Controller 9
6.2 Analogue Output (ELT-OAA) 9
6.3 Standard Additional Features 10
6.4 External Set Point 10

7. Switching Plan 11

8. Drilling Template 12



Please read this manual carefully before using this product. Warranty claims cannot be considered in case of damage caused by failure to comply with these operating instructions! This documentation was compiled with utmost care, however, we cannot guarantee for its correctness in every respect.



Instructions for use and useful or important information.



Immediate hazard which can lead to death, serious injury or considerable material damage.

This User's Manual is intended to familiarize you with the product, the safety instructions, mounting and installation, operation and setting, and any optional features.

Contents subject to change. ELTHERM GmbH accepts no liability for any errors in this documentation.. No liability whatsoever will be accepted for damage incurred in direct connection with the supply or use of this documentation, unless there is a legal obligation. Disclosure and copying of this document and the use and divulgence of its contents are not permitted , unless expressly authorized. Failure to comply will result in liability for damages. All rights in respect of a patent or registered trademark being granted reserved.

1. Product Description

1.1 Function

The temperature controller switches the connected heating based on a given set-point. The limiter ensures that the heating is switched off when reaching the overtemperature. Further temperature limits can be monitored. If a limit is exceeded or not reached, potential free contacts are switched (K3/K4)The unit can be configured for five different types of controller in the factory.

1.2 Controls and Display

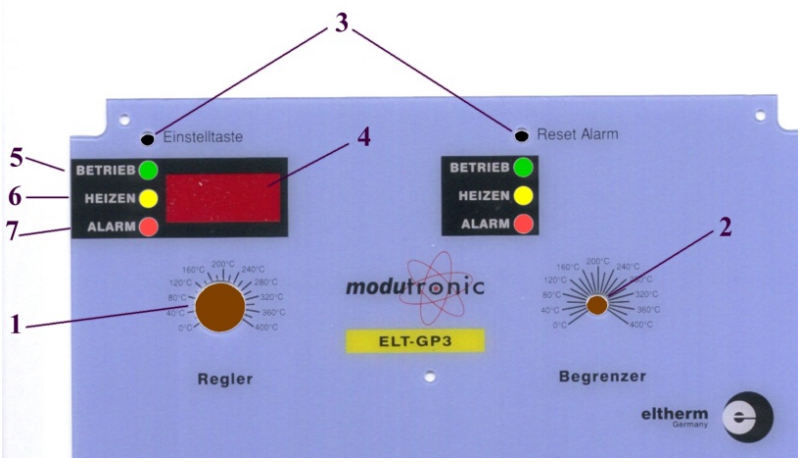

Fig. 1: Controls and Display

Pos. 1: Potentiometer for adjusting the set-point of the controller

Pos. 2: Potentiometer for adjusting the set point of the limiter

Pos. 3: Control key Controller
To switch the display from actual to target (set-point) value (if optional display is present).
To input the temperature limits (Controller)
To re-set the limiter

Pos. 4: Display actual / set-point of the controller

Pos. 5: LED ‘Operation’. Lights up green when input voltage is present.

Pos. 6: LED ‘Heat’. Lights up yellow when the heater is switched on.

Pos. 7: LED ‘Alarm’
Lights up red when there is a temperature probe fault or the temperature at the limiter is exceeded. Flashes if the preset temperature limit is exceeded or is not reached.

The LED´s ‘Heat’ and ‘Alarm’ have another meaning when adjusting the set-point (refer to chapter 5 **‘Settings and Operation’**).

2. Technical Data ELT-GP3 (Controller and Limiter identical)

Mains voltage:	230 V, 50 Hz
Power consumption:	max. 5 VA
Temperature measuring range:	-51°C to +870°C
Controller range:	0°C to 400°C (standard configuration)
Hysteresis	2 K
Accuracy: with Pt100: with thermocouple type K: with thermocouple type J:	±(0.5°C+0.5% of meas.r.) ±(1.0°C+1.0% of meas.r.) ±(1.5°C+1.5% of meas.r.)
Resolution (internal):	0.1°C (Pt100) 0.4°C (thermocouples)
Meas.current (Pt100):	approx. 0.75 mA

2.1 **Terminal Connection Plan** (Identical for controller and limiter)

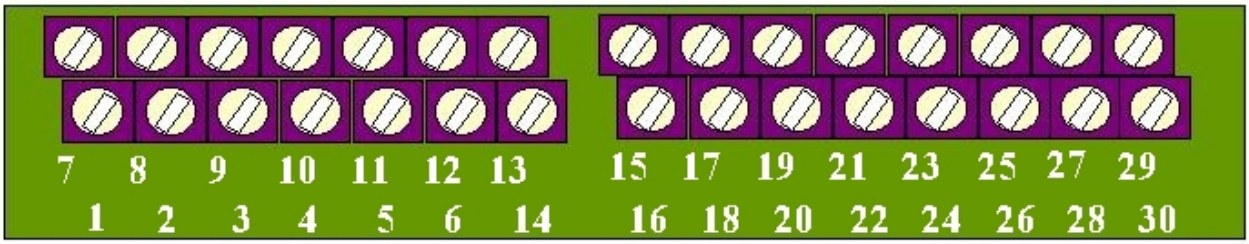

Fig. 2: Terminals

The controller can be configured for various types of controllers in the factory. Depending on the type of controller, the outputs may have different functions. The following types of controller are available from the factory:

- 2-position controller (conventional or PID) with hysteresis (normal case)
- PID-controller with PWM (= Pulse-Width-Modulation) output (quasi-continuous)
- PID-continuous controller
- Limiter

Where there are differences in the outputs, you will find the abbreviations '2-position', 'PID-PWM' and 'PID-cont.' in Table 1(identical for controller and limiter).

Controller cycle time:	approx. 1.2 s
Housing:	Plastic-walled housing with transparent cover, Pg-cable gland
Int. protection	IP 67
Ambient conditions:	0°C to 40°C, max. 90% rel. humidity (non-condensing)
Dimensions:	213 x 185 x 118mm (W x H x D)
Connections:	30 cage pull-terminal screws à 2.5 mm²
Inputs:	(see chapter 2.4 Terminal Connection Plan)
Outputs:	(see chapter 2.4 Terminal Connection Plan)

2.2 Terminal No. Explanation

Terminal No.	Name	Meaning
1	L	Mains connection for the unit (phase conductor).
2	L	Second "L" terminal. Possible use: The heater is to be connected directly to the unit. In this case: Jumper from 2 to 7.
3	N	Mains connection for the unit (neutral conductor).
4	N	Second "N" terminal. Possible use: The heater is to be connected directly to the unit. In this case: A) Without using the second load relay K2 (normal case): Connect the heater at terminals 4 and 8. B) With use of the second load relay K2 (e.g. for Benelux countries): jumper from 4 to 9 and connection of the heater at terminals 8 and 10.
5	PE	Mains protective conductor.
6	PE	Second "PE" terminal, e.g. for connecting the protective conductor for the heater.
7 (2-position)	K1	Contacts 7 + 8 as normally open contacts. Input of load relay K1, max. 16 A / 230VAC. Phase connection from mains.
8 (2-position)	K1	Contacts 7 + 8 as normally open contacts. Output of load relay K1, max. 16 A / 230VAC. Phase connection of heater.
7,8 (PID-PWM) (PID-cont.)	K1	Contacts 7 + 8 as normally closed contacts, max. 16 A / 230VAC. Open when the preset high temperature limit is exceeded (High Limit).
9 (2-position)	K2	**Optional**, if the phase and neutral conductors are to be switched (e.g. for Benelux countries): Contacts 9 + 10 as normally open contacts. Input of load relay K2, max. 16 A / 230VAC. Neutral conductor from mains.
10 (2-position)	K2	**Optional**, (see above). Contacts 9 and 10 as normally open contacts. Output of load relay, max. 16 A / 230VAC. Neutral conductor of the heater.
9,10 (PID-PWM) (PID-cont.)	K2	**Optional**, see: 7,8 (PID-PWM) (PID-continuous)
11, 12	K3	**Optional**. Contacts 11 + 12 as normally closed contacts, max. 8 A / 230VAC. Open in case of probe breakage or probe short (in the case of a Pt100) and for probe interruption (in the case of a thermocouple). Also open when the preset high temperature limit is exceeded or the preset low temperature limit is not reached.
13, 14	K4	**Optional**. Contacts 13 and 14 as normally closed contacts, max. 8 A / 230VAC. Open when the preset high temperature limit is exceeded (High Limit).
15, 16(2-position)	+, -	SSR-output, 12V, max. 30 mA for connection of a solid state relay for heater ON / OFF.
15, 16 (PID-PWM)	+, -	SSR-output, as PWM (Pulse-Width-Modulation) -signal, 12V, max. 30 mA for connection of a solid state relay
15, 16 (PID-cont.)	+, -	not used.
17 (2-position) (PID-PWM)	U	**Optional**. Electrically isolated analog output, Voltage: 0 - 10V (between terminals 17 and 19), proportional to the actual temperature, referred to the preset control range, Max.power: 250 mW.
18 (2-position) (PID-PWM)	I	**Optional**. Electrically isolated analog output, current drain: 0 - 20mA (between terminals 18 and 19), proportional to the actual temperature, referred to the preset control range. Max. output: 250 mW.
17 (PID-cont.)	U	**Optional**. Electrically isolated analog output as manipulated variable, Voltage: 0 - 10V (between terminals 17 and 19). 5V would e.g. correspond to half power.
18 (PID-cont.)	I	**Optional**. Electrically isolated analog output as manipulated variable, current drain: 0 - 20mA (between terminals 18 and 19). 10mA would e.g. correspond to half power.
19	G	Common reference potential for terminals 17 and 18.
20	+	Electrically isolated bus interface. Pay attention to polarity to avoid communication error.
21	-	see above
22	Digital In E1	**Optional**. Electrically isolated digital input, voltage: 10 - 30VDC (at terminals 22 and 24) Function: External controller release or reset at the limiter resp.: Controller: If voltage is present: controller is in automatic mode. If no voltage is present: controller is in standby mode (i.e. heater is not being supplied with current, it is just being monitored). Limiter: if the limiter has switched off because of overtemperature, it can be reset over the input E1 if the temperature is below set point
23	Digital In E2	No function at present.
24	G	Common reference potential for terminals 22 and 23.
25	+	Pt100 , two-wire system: terminals 26 and 27, jumper between 25 and 26 and between 27 and 28.
26	+	Pt100 , three-wire system: jumper between 25 and 26, left connection to 26, right to 27 and 28.
27	-	Pt100 , four-wire system: left pair to 25 and 26, right pair to 27 and 28.
28	-	Thermocouple, type J or K: terminals 26 (+) and 28 (-).
29, 30	+, -	Set-point input, voltage: 0 - 10VDC. Function: External set-point adjustment. The applied voltage must be proportional to the temperature set-point (target temperature), referred to the preset control range.

Table 1

3. General Safety Instructions

3.1 Proper Use

In its standard configuration, the temperature controller unit ELT-GP 3 is a two-position controller used to control electric heaters. In case of overtemperature, the integrated limiter switches off the heater. The controller also indicates temperature deviations of the heater and any faults which may occur in the temperature probes used for this purpose. Any other use above and beyond that is deemed improper use. Your temperature controller is state of the art and has been built in compliance with recognized safety regulations. Its assembly and use can nevertheless constitute a hazard to persons or cause impairment of the unit and other material damage. The temperature controller must only be used when it is in technically perfect working order, for the purpose for which it is intended, in awareness of all safety and hazard aspects and in compliance with the information given in the User's Manual.

3.2 Hazards Of Electrical Power

Work on electrical equipment must only be done by a qualified electrician or by duly trained personnel under the instruction and supervision of a qualified electrician, in accordance with all applicable electrical standards and regulations.

3.3 Modifications To The Temperature Controller

Do not modify the equipment or the software without the manufacturer's prior authorization. Failure to comply will render all warranty claims null and void and we cannot give any guarantees for trouble-free operation of the controller.

4. Mounting and Installation

4.1 Mounting

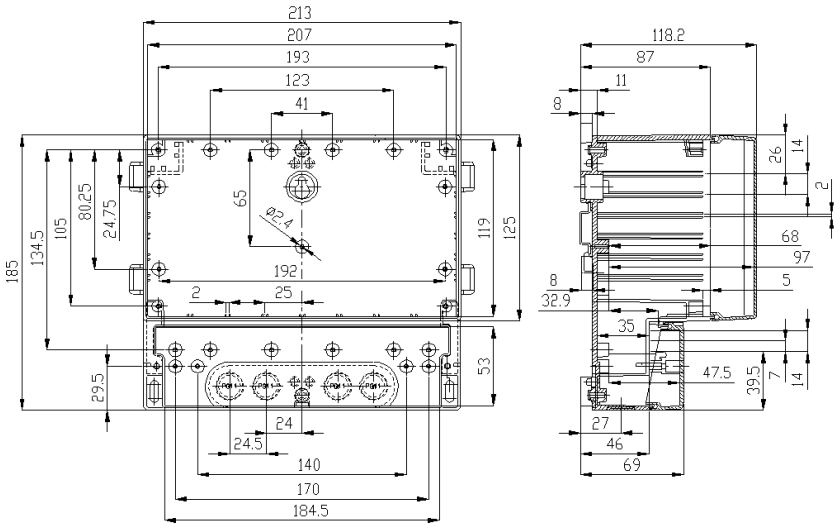

Fig. 3: Mounting template

Using the installation template, drill three holes, ∅ 5 mm, at the site of installation. Screw the unit into place with dowel screws. The three arrows mark the location of the holes. The housing can also be installed on a 35 mm DIN-rail.

4.2 Installation

Read chapter 3 **'General Safety Instructions'** carefully prior to installation.

MORTAL DANGER!
Before connecting the mains lead, you must switch off all power to the complete control cabinet!

First connect the ground conductor (green-yellow colour-coding) to the unit. Then connect the live wires. Connect all necessary conductors Refer to chapter 2.4 **'Connection Plan'**.

Before putting the unit into operation, check that all contact screws at the terminal strips are tight!

5. Settings and Operation

All position numbers given here refer to Figure 1 in chapter. 2.2 **'Controls And Displays'.**

5.1 Setting The Temperature Set-Point (Target Temperature)

- With the help of a screwdriver, or similar, briefly tap the control key (**Pos. 3**). The controller is now in set mode for the setting the set-point.
- Adjust the set-point by turning the potentiometer (**Pos.1**).
- Briefly tap the control key (**Pos. 3**) again and the actual value will be indicated.

The turning range of the potentiometer corresponds with the preset temperature control range. **Example:** Temperature range: 0°C – 400°C; Left limit stop of the poti: 0°C; Right limit stop of the poti: 400°C

5.2 Setting Bottom and Top Temperature Limits (Low Limit and High Limit)

The temperature limits are set by means of a touch-combination of the control key **(Pos. 3)**. Whilst setting is being done, the two bottom LED`s ('HEAT, ALARM'; **Pos. 5 and 6**) indicate the respective setting status. Setting is done as follows:

- Press the control key (**Pos. 3**) for approx. 3 seconds. The controller switches to limit input mode.
- When the input mode is active, the two bottom LED`s (**Pos. 6 and 7**) light up.
- Press the control key (**Pos. 3**) briefly. The LED 'HEAT' (**Pos. 6**) lights up continuously and the LED 'ALARM' (**Pos. 7**) flashes.
- Set the bottom temperature limit (Low Limit) by turning the potentiometer (**Pos. 1**).
- Press the control key (**Pos. 3**) briefly. The limit which has been set (Low Limit) is automatically stored by the controller.
- The LED 'HEAT' (**Pos. 6**) now flashes and the LED 'ALARM' (**Pos. 7**) lights up continuously.
- Now set the top temperature limit (High Limit) by turning the potentiometer (**Pos. 1**).
- After setting, press the control key (**Pos. 3**) again briefly. Both LED`s ('HEAT, ALARM', **Pos. 6 and 7**) light up continuously.
- The controller is now in input mode for inputting the temperature set-point. After setting the temperature limits, the set-point has to be reset (see chapter 5.1 **'Setting The Temperature Set-Point'**).
- Tap the control key (**Pos. 3**). again briefly. The newly set values are now stored and taken over by the controller. The controller has now returned to control and monitoring status (normal status).

Whilst setting is being done, the controller continues to work in control and monitoring mode.

After you have set the temperature limits, monitoring of the bottom temperature limit (Low Limit) is stopped until the actual temperature initially reaches the bottom temperature limit (Low Limit) or exceeds it.

When reaching one of the temperature limits (Low or High-Limit), only the fault-indication relay K3 opens and the red LED flashes.

5.3 Limiter Operations

Set the requested temperature of the limiter at the poti **(Pos. 2)** with a screw-driver, or similar. When the mains voltage is switched on, the limiter is in failure-mode and is unlocked by pressing the control key (**Pos. 3).** If the set-value is exceeded during operation, the limiter will switch off and the red LED flashes. Re-setting of the limiter with the control key (**Pos. 3)** only possible after the temperature falls below the set-value.

6. Optional Features

6.1 Digital Display (ELT-ONA) for Controller

The three-digit temperature display is limited to a range of -51 to +870 °C .The following settings are displayed with the digital display module:

- Actual temperature of the heater
- Temperature set-point and bottom (Low Limit) or top (High Limit) temperature limit in the respective setting mode of the controller (see chapter 5 **'Settings And Operation'**).
- Fault messages:

Digital display flashes:	Bottom or top temperature limit (Low Limit, High Limit) not reached or exceeded respectively.
E01:	Short in the temperature probe (for Pt100 only)
E02:	Conductor broken in the temperature probe

Install the digital temperature display as follows:



Before you install the digital temperature display in the controller, disconnect the controller from the power supply.

- Remove the transparent cover of the housing.
- Screw the front plate off the controller.
- Insert the additional PCB in the space provided for it (**see Fig. 4**). Proceed with extreme caution when doing so. Make sure that none of the plug connections are bent or damaged.
- After putting it into place, secure the PCB with locking screws at the threaded bolts provided for this purpose on the PCB.
- Now screw the new front plate with window onto the controller.

6.2 Analogue Output (ELT-OAA)

When retrofitting an analogue output, we will supply you with the required plug-in board.



To install the plug-in board, proceed as described in chapter 6.2 'Digital Temperature Display'!

After installation, the connections are active for analogue output (Terminals 17, 18 and 19, see **'Terminal Connection Plan'**).

An external power source is required to achieve the 0/4-20mA signal (see Switching Plan).

6.3 Standard Additional Features

Depending on where it is to be used, we can supply the controller not only as a 2-position controller but also in the following configurations:

Controller Configuration	Function
PID-2-position	PID-two-position controller with hysteretic
PID-PWM	PID-controller with pulse width modulation output (0....7/7, 200 ms)
PID-continuous	PID-controller with continuous output (0-10V/20mA)
Limiter	Contact opens when reaching the set-value and locks against automatic reconnection

Table 2

The controller can be additionally equipped from the factory with a further load relay (K2) and two additional signal relays. Refer to the terminal connection plan for the meanings of these relays.

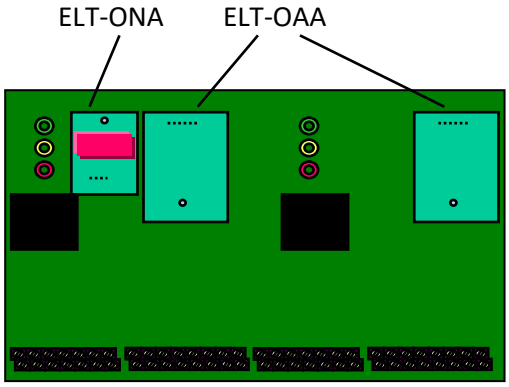

Fig. 4: Optional Features

6.1 External Set Point

The entry of the external set point changes automatically, depending on the signal chosen with the analogue output.

Analogue output	External set point
0-20 mA	0-10 V
4-20 mA	2-10 V

A 500 Ohm shunt can be added externally to achieve a 4-20mA signal.

7. Switching Plan

ELT-GP: The controller can be additionally equipped from the factory with a further load relay (K2) and two additional signal relays. Refer to the terminal connection plan for the meanings of these relays.

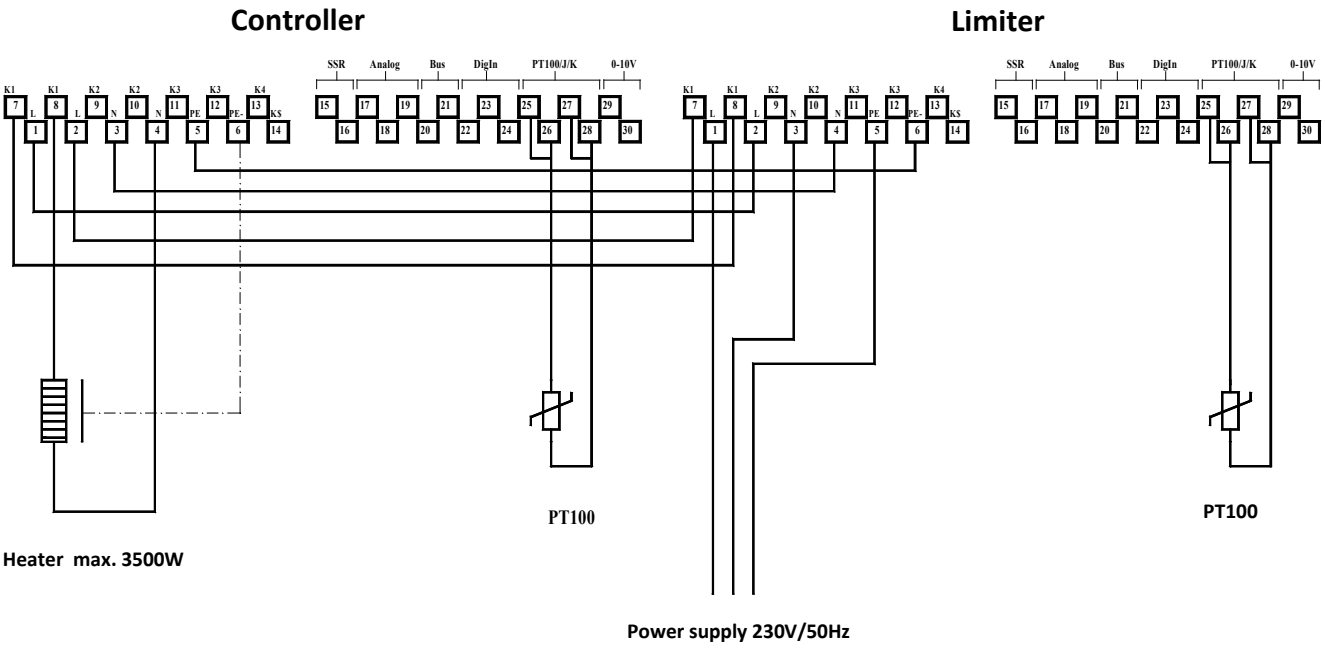

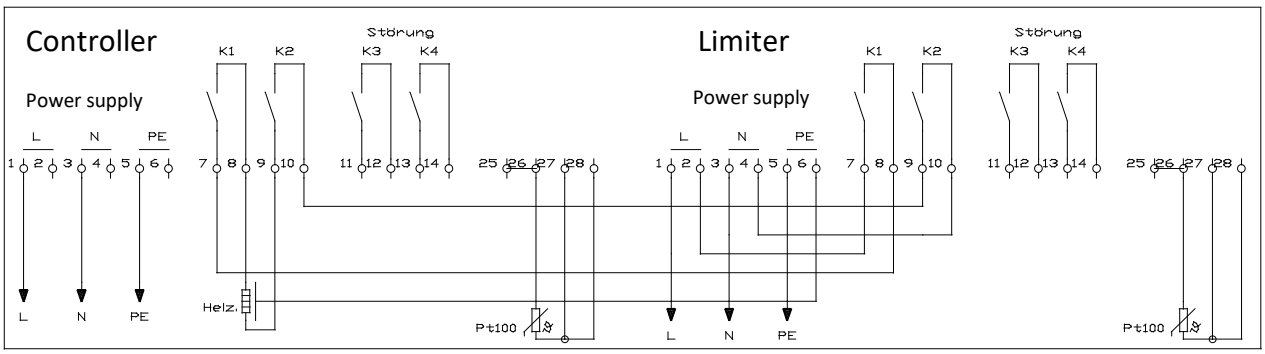

Connection of passive current output 0/4-20mA to passive PLC analog input.
ELT-ANZ is required for the configuration of an analogue output (Refer to BU-068)

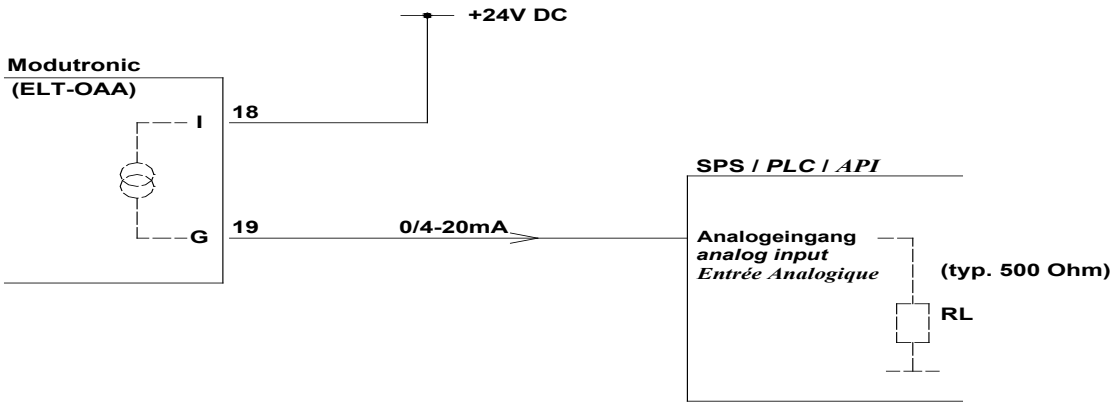

8. Drilling Template

Drilling Template

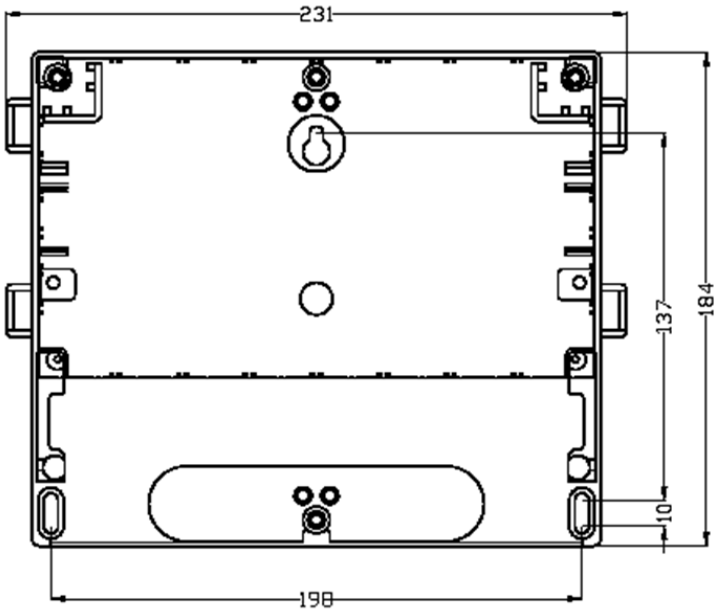

Dimensions
235x185x19 mm