eltherm GmbH
Ernst-Heinkel-Straße 6-10
57299 Burbach
Fon: +49 (0) 27 36 / 44 13-0
Fax: +49 (0) 27 36 / 44 13-50
E-Mail: info@eltherm.com
Internet: www.eltherm.com

eltherm®
innovations in heat tracing

QAA – 129
Mounting Instructions Trace Heater ELP / PFA in Hazardous Areas

Description and Technical Data

Application
Trace heaters ELP / PFA are suitable for industrial use on pipes, vessels and related equipment in areas with combustible gas or dust. (Equipment Group IIC and IIIC, Category Gb and Db according to EN 60079-0:2009, EN 60079-7:2007, EN 60079-30-1:2007 and EN 60079-31:2009). The heater is to be operated in controlled design or stabilized design according to EN 60079-30-2. The electrical connection needs to be made to a suitable junction box approved for Hazardous Area use or outside the Hazardous Area. Suitable eltherm Ex power connection and termination kits need to be used.

Components
The following certified components can be used in combination:

- Trace heater ELP/PFA
- End cap EL-ECP
- Plastic gland 0X80130

Marking of Components
The single components are marked as follows:

Trace heater ELP/PFA

Ex II 2G Ex e IIC Gb Ex II 2D Ex tb IIIC Db EPS12ATEX1438U 0637

End cap EL-ECP

eltherm EL-ECP <Lot-No: ...> <suitable heater circumference>

Ex II 2G Ex e IIC Gb Ex II 2D Ex tb IIIC Db IBExU05ATEX1154U IP 65

Plastic gland 0X80130

eltherm GmbH Burbach M25 x 1,5

Ex II 2G Ex e IIC Gb Ex II 2D Ex tb IIIC Db
IBExU07ATEX1022X IP 65 CE 0637

Applicable temperature range:
The temperature range of the trace heater ELP/PFA is –45°C to +260°C, fitted with end cap EL-ECP -25°C to +210°C. At ambient temperatures below -25°C, the plastic gland 0X80130 is to be installed in a way protected from mechanical stress > 4J.

Mechanical Properties
The trace heater ELP/PFA has a minimum bend radius of 25 mm and is rated 7J against impact.
The end cap EL-ECP is rated 4J. It is to be installed in a way protected from mechanical stress > 4J.

Additional Remarks regarding Heat Tracing Installations according to EN 60079-30-1 Section 6.3

- residual current devices are to be used with each heating circuit
- heating circuits are to be isolated from power supply prior to any installation or maintenance work
- keep trace heater ends and termination kits dry until installation is complete
- the conductive covering of the trace heater is to be connected to potential earth
- the existence of trace heaters is to be announced by appropriate warning labels installed in suitable intervals along the heated workpiece

Associated Documents

In addition to these mounting instructions, the following documents provided with the single components need to be observed:

- data sheet trace heater ELP/PFA
- BU 080 (plastic gland)
- QAA 048 (end cap EL-EC…)

Installation of trace heater ELP/PFA

1. Receipt of Goods

After receipt of the goods check the heater and the accessories and compare with the data on the delivery note to ensure that the correct material was supplied. Ensure that only components listed in this manual are used.

Ensure that the data sheet has been supplied. The data sheet is necessary for a correct installation. The installation is not to be done without presence of the data sheet.

Ensure that the corresponding EC Declaration of Conformity has been supplied. The type designation stated in the Declaration of Conformity must match the type designation printed on the trace heater.

It is recommended that the insulation resistance be checked (see “6. Test and Commissioning”).

2. Storage

The goods have to be stored in a dry place at an ambient temperature of –20 … +60°C. If a dry storage is impossible, the trace heater has to be closed with an end termination set. This is also necessary if a heating circuit cannot be finished at the end of a shift.

3. Length of Heating Circuit

The max. allowable length of a heating circuit is to be designed according to the relevant data sheet of the heating cable. It depends on the maximum allowable voltage drop (max. recommended 10%) and the utilisation of the circuit breaker (recommended: 16A CB with “C” characteristic (slow), max. 80%).

4. Protective Measures:

- the use of a ground fault protection device (30mA, or 30mA above the inherent fault current level of the installation) for each heating circuit is mandatory
- when using the trace heaters on metal surfaces, they also have to be protected against indirect contact acc. to DIN VDE 100, part 410 (or equivalent standards) before operation of the system
- the metallic braid or screen of the trace heater has to be connected to the potential earth
- de-energise all circuits prior to installation or maintenance of heating components
- clean with damp cloth only to avoid electrostatic charge

5. Installation Instructions:

- remove any sharp objects on the surface to be heated
- clean and degrease the surface
- the installation of a heating circuit has to be carried out using original eltherm accessories acc. to the eltherm installation instructions. A minimum bend radius of 25 mm must not be exceeded

  Attention: Do not use adhesive tape with emollients (i.e. PVC)!

  Attention: trace heaters ELP must not overlap, cross or touch!

- the trace heater is to be fully covered (the entire length) with aluminium foil in order to prevent insulation material slipping between the heater and surface to be heated. If the insulation is covered with a metal cladding, an insulation entry kit has to be used to avoid mechanical damage of the trace heater.

- The connection and end termination of a heating circuit has to be carried out using eltherm Ex power and end termination kits. Required air gaps and creeping distances need to be observed (see eltherm termination instructions)!

  Caution!: To avoid short circuit, do not connect the two bus wires of the trace heater to each other. Under all circumstances observe the termination and maintenance instructions for the connection and termination of the trace heater!

  The free cable end is to be connected either outside the Hazardous Area or to a connection box which is approved according to a standardized type of protection..

  Suitable Kits: power termination kit ELVB-SREx-10 (item no. 0X81PA2), end cap EL-ECP-Ex (item no. 0X81EP1)

- make sure to attach the trace heater – especially the area next to the electrical connection – to its surroundings in a proper way to avoid pulling stress or torsion on the electrical connection.

- the end cap EL-EC… and the cable joint 0X81125 need to be installed in a way that they are protected from mechanical stress > 4J and from UV radiation. In case ambi-ent temperatures may drop below -25°C, the gland 0X80100 needs to be protected from mechanical stress > 4J, too.

- upon completion of the installation, the heating circuit needs to be marked by fitting an appropriate label to the associated junction box or to the trace heater close to the junction box. The label shall be weatherproof and bear relevant information of all used components.

- identification: electrically heated parts have to be identified in reasonable distances with warning labels “Electrical Heating” on the thermal insulation (approx. 5 m distance between each label on pipelines or at least 1 warning label per pipe-branch respectively).

6. Test and Comissioning:

After the completion of a heating circuit and prior to the installation of the thermal insula-tion, the following steps have to be taken:

- a visual check of the trace heater regarding possible mechanical damages and/or incorrect installation.
- Insulation resistance test
  - the insulation resistance of each heating circuit is to be measured between each single bus wire and the metal braid or screen. The measured values are to be noted.
  - test voltage: min 500 VDC, preferably 2500 VDC
  - independent of the heating circuit length, the insulation resistance must not be lower than 20 MOhm. In case of a lower insulation resistance, the source of defect has to be determined and eliminated.
  - check of the function of the heat circuit (only in connection with the required tempera-ture controller and/or limiter).
- eventual damages must be repaired/replaced immediately. With short heating circuits, the trace heater may be replaced completely. With longer heating circuits, the defect is to be eliminated by cutting out the damaged part and replacing it by a new piece of trace heater according to the termination instructions.
- repeat the tests after the thermal insulation has been applied

7. Operation and Maintenance:

- local laws and regulations for the use of electrical trace heaters in hazardous areas are to be followed
- the permissible operating specifications stated in the data sheets (i.e. voltage, amperage, exposure temp., operating temp., IP protection classification) are to be followed accordingly
- the permissible temperatures given in section “Applicable temperature range” must not be exceeded
- in order to preserve energy, to obtain accurate temperatures or to protect the heaters use of temperature controllers can be appropriate. If in doubt, please contact the eltherm project department.

  The sheath temperature of the trace heater must not exceed the maximum permissible temperature of the effective T class. This is to be achieved by controlled or stabilized design in accordance with EN 60079-30-2.
- self regulating trace heaters are generally maintenance free. However, it is recommended that the trace heaters be checked by qualified personnel in regular intervals for damages and insulation resistance.
- the opening of controllers, junction boxes and terminations is permitted only when the heating system is not energised
- installed trace heater has to be protected against damages that may occur during repair work on heated components
- after completion of the repair, the heating circuit will once again need to be tested.
- damaged heating circuits shall not be operated.
- temperature control units and control devices are to be checked at least annually by trained workers or authorized persons

Installation of Heating Tapes on Pipes

The heating tape is traced and fixed parallell to the pipe axis.

Hazardous Area: a max. 300mm

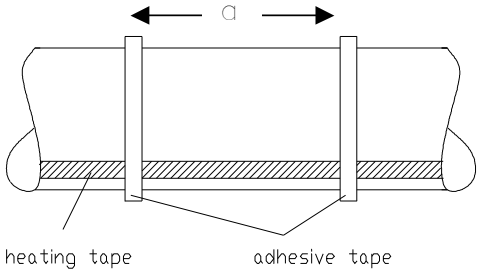

For multiple tracing please follow the drawing.

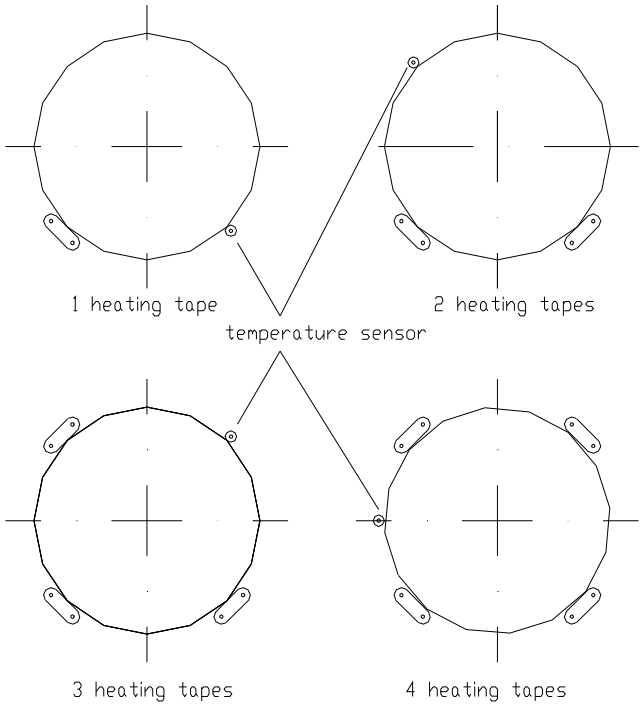

Installation of heating tapes on pipe supports

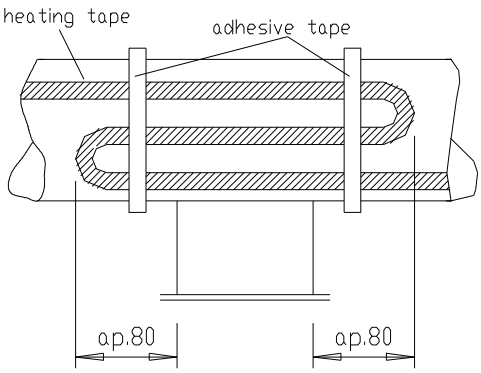

Installation of Heating Tapes on Valves

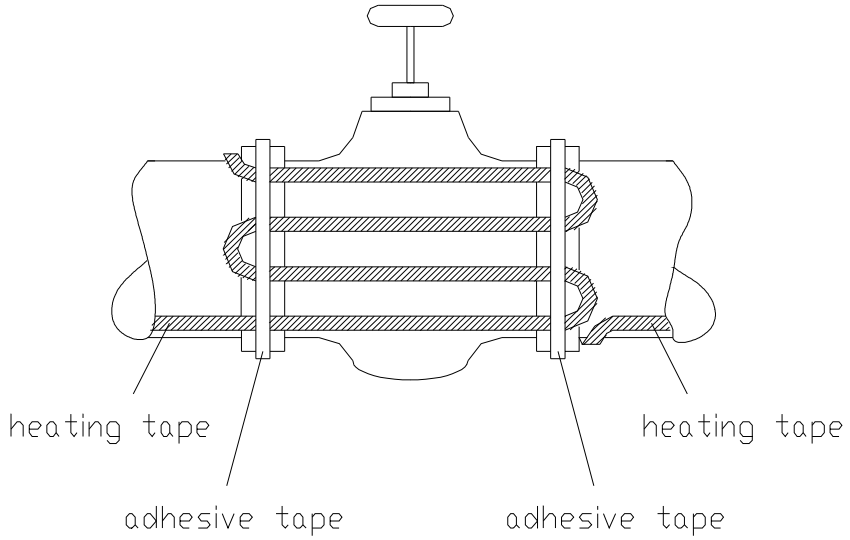

Installation of heating tapes on valves by means of a wire guard for a quick disassembly and re-assembly of the heating during maintenance work at the valve

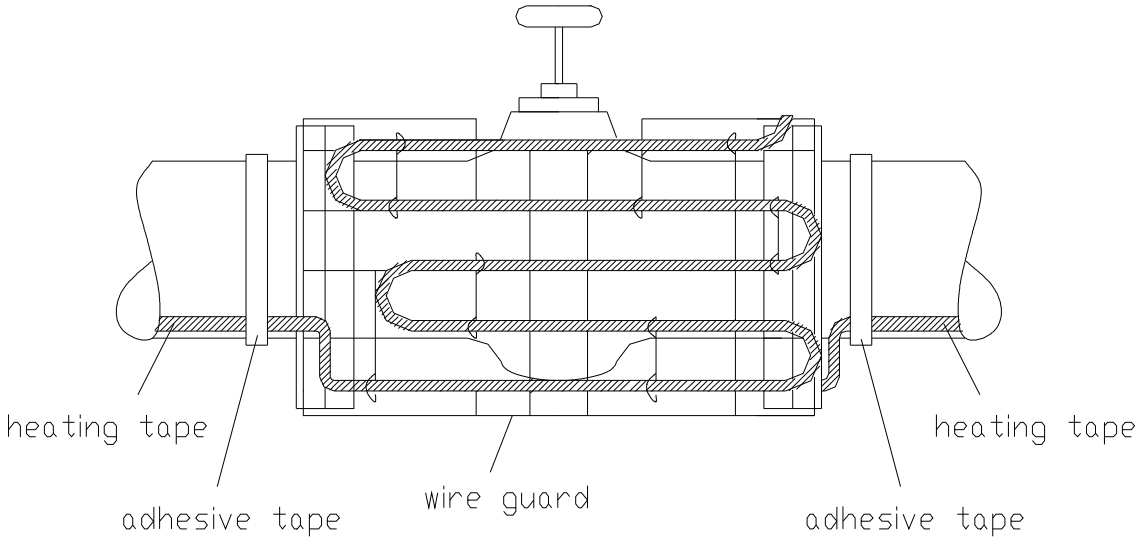

Installation on elbows

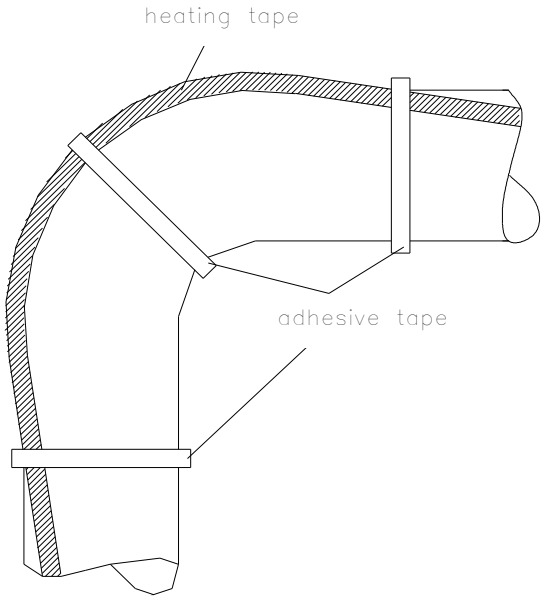

Installation on flanges

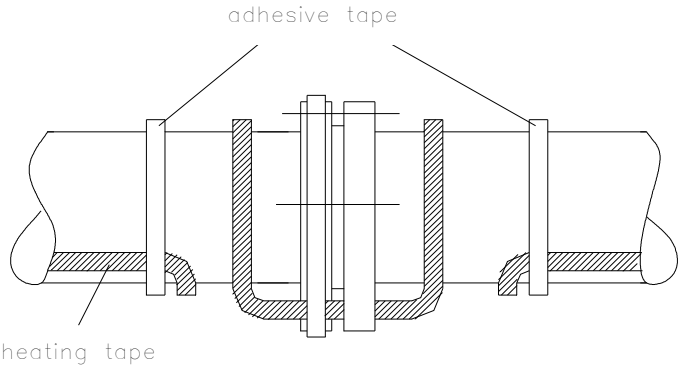

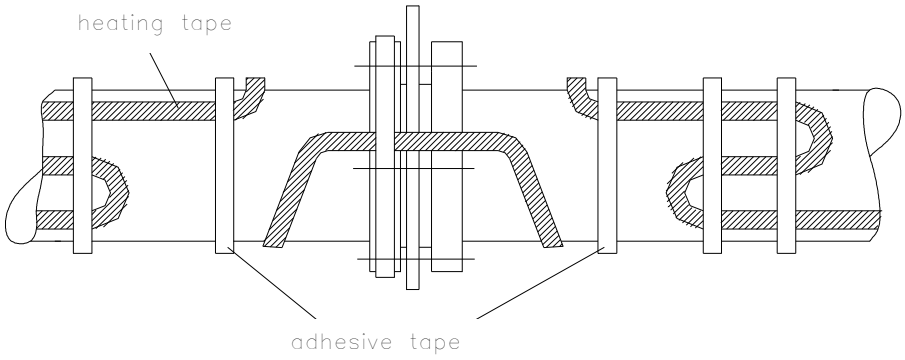

Installation of Heating Tape on Fittings & Valves

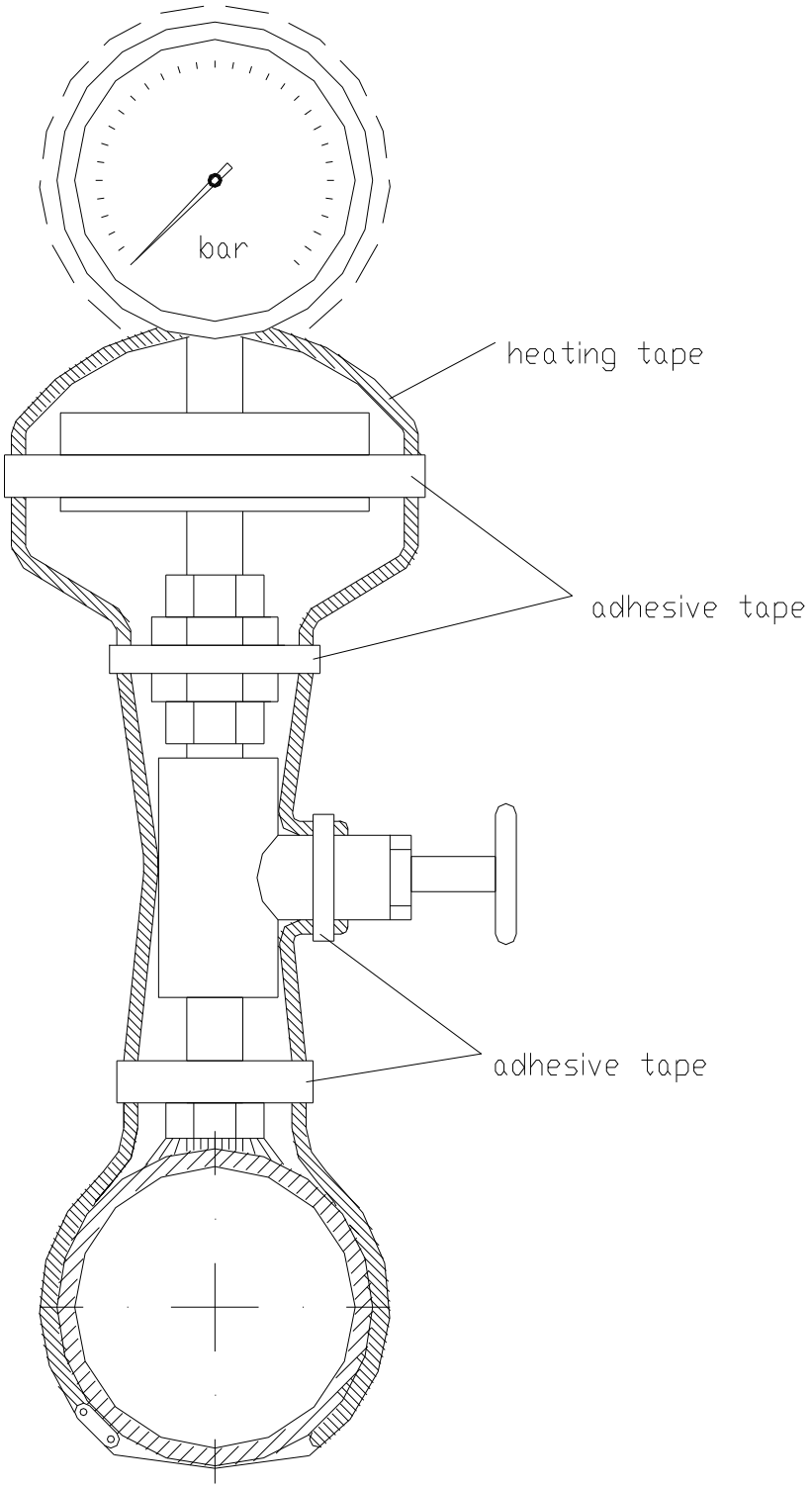

Installation of Heating Tapes on Level Indicators

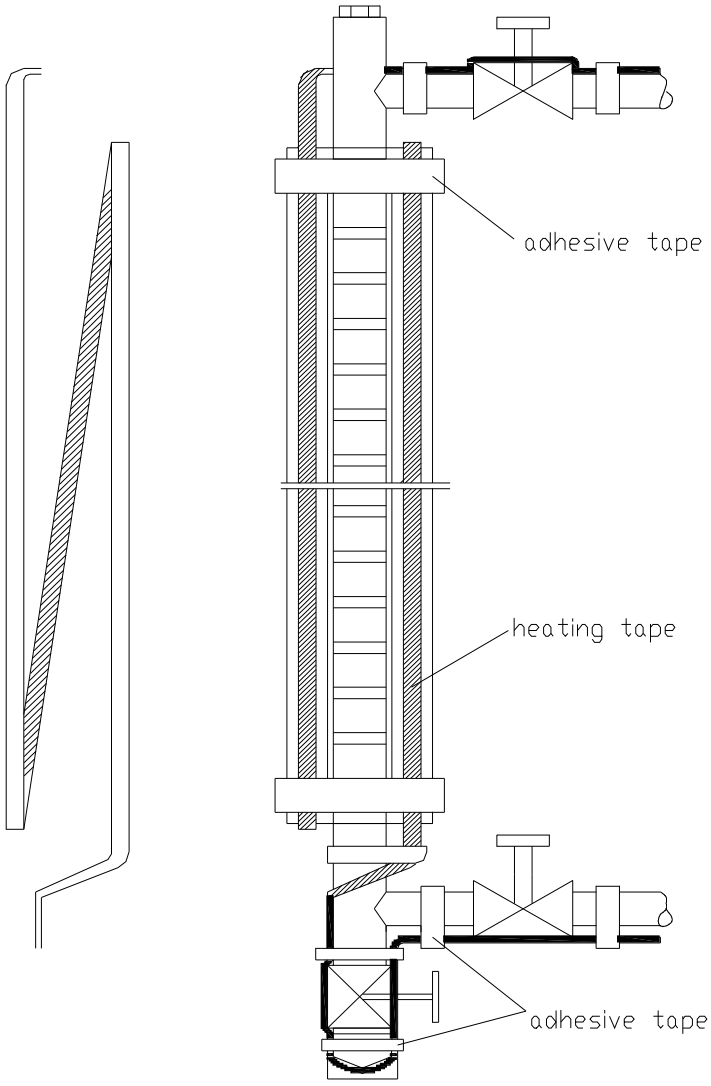

Remark: Attach heating tape with self-adhesive aluminium tape