QAA 149
Termination instructions
trace heaters type ELK-AG-NA in Div1
with heater entry kit EL-HAZELECT-AG
Kit part No: 09CA050

QAA 149
Instruction de terminaison pour des câbles chauffants type ELK-AG-NA en Div1 avec kit d'entrée EL-HAZELECT-AG
Réf. de pièces: 09CA050

eltherm Canada Inc.
1155 Appleby Line, Unit E7
Burlington, ON L7L 5H9
Canada
Phone: +1 (289) 812-6631
Fax: +1 (844) 325-6750
E-Mail: info@eltherm.ca
Internet: www.eltherm.ca

DESCRIPTION

The heater entry kit EL-HAZELECT-AG (09CA050) is designed for use with eltherm's series trace heaters ELK-AG-NA in Division 1 rated hazardous areas. The kit contains all required parts necessary for assembly and sealing of two trace heater entries, thus serving both ends of the series heater. The completed kit is to be fitted to a suitable Div1 rated junction box of choice (e.g. Hubbell Killark GR type enclosures etc.). Please follow these instructions carefully.

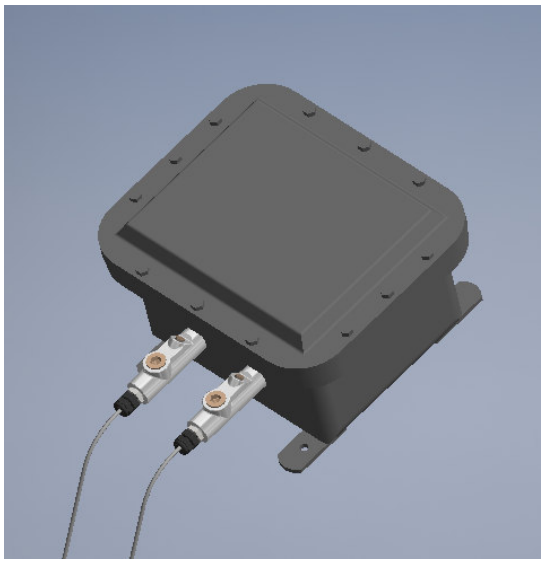

1. Recommended tools / *Outils recommandés*

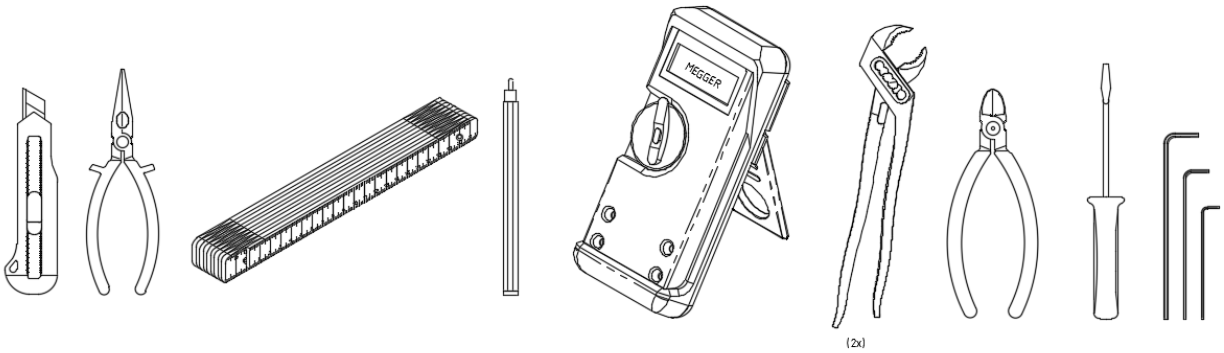

- Utility knife
- Needle nose pliers
- Ruler
- Marking pen/pencil
- Insulation Resistance Test Equipment (Megger)
- Diagonal cutters
- standard (slotted) screwdriver
- 0.109" hex driver
- 1/4" hex driver
- 3/8" hex driver
- pipe wrenches (2)

2. Contents of kit / *Contenue du jeu de connexion*

Item	Description	Qty
1	seal fitting c/w nipple (1/2" NPT)	2
2	sealing compound	1
3	packing fiber	1
4	cable gland 3/8”	2
5	reducer 3/8” – 1/2"	2
6	heat shrinkable tubing 3/16"	2
7	ring terminal	2
8	Terminal block AWG 8	2

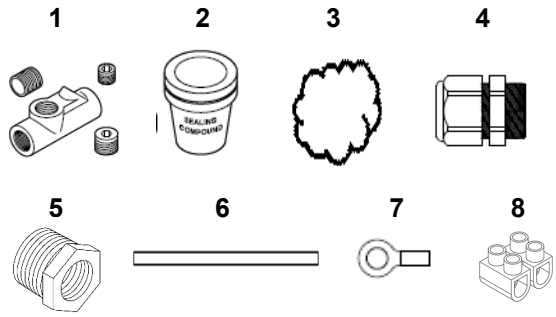

3. ADDITIONAL / OPTIONAL ITEMS

- Div1 junction box with terminals (recommended rating 40A in order to fully exploit the trace heater capabilities)
- Conduit plugs
- Conduit (for power leads only)
- Mounting bracket for Division 1 junction box
- Pipe straps and other mounting accessories

WARNING

Installation and connections must be made in compliance with NEC, CEC and local wiring regulations and electrical codes.

Component approvals and performance ratings are based on the use of approved eltherm parts and accessories only.

Assembly to be performed by personnel trained, qualified and knowledgeable in Div1 trace heating systems.

AVERTISSEMENT

Le montage et les raccordements doivent être réalisés en conformité avec les directives et les codes de l’électricité NEC et CEC.

L’homologation de composant et les cotes de rendement sont basées sur l’utilisation exclusive des pièces et des accessoires du fabricant eltherm.

L’assemblage doit être effectué par du personnel formé et qualifié avec des connaissances dans les systèmes de traçage électrique Div1.

Important Notes and Safety Information
Remarques importantes et consignes de sécurité

Make sure to use appropriate tools for connections of wires and end sleeves
S'assurer d'utiliser l'outillage approprié pour exécuter les raccordements en accord avec la dimension des câbles et des terminaisons.

Assembly steps are to be performed by authorized personnel only
Seul le personnel qualifié et formé est autorisé à effectuer ces activités !

After assembly perform all tests required by NEC / CEC and local electrical codes!
Une fois les travaux terminés, réaliser tous les essais requis par NEC /CEC et les codes d'électricité locaux!

Marking of Kit



WARNING!

Installation and connections must be made in compliance with NEC, CEC and local wiring regulations and electrical codes.

Component approvals and performance ratings are based on the use of approved eltherm parts and accessories only.

Assembly to be performed by properly trained and qualified personnel only.

Agency approvals and national electrical codes require the use of ground-fault protection to be used.

CAUTION!

Read all hazard warnings on supplied sealing compound container carefully, avoid physical contact with compound by wearing appropriate safety clothing.

System Overview

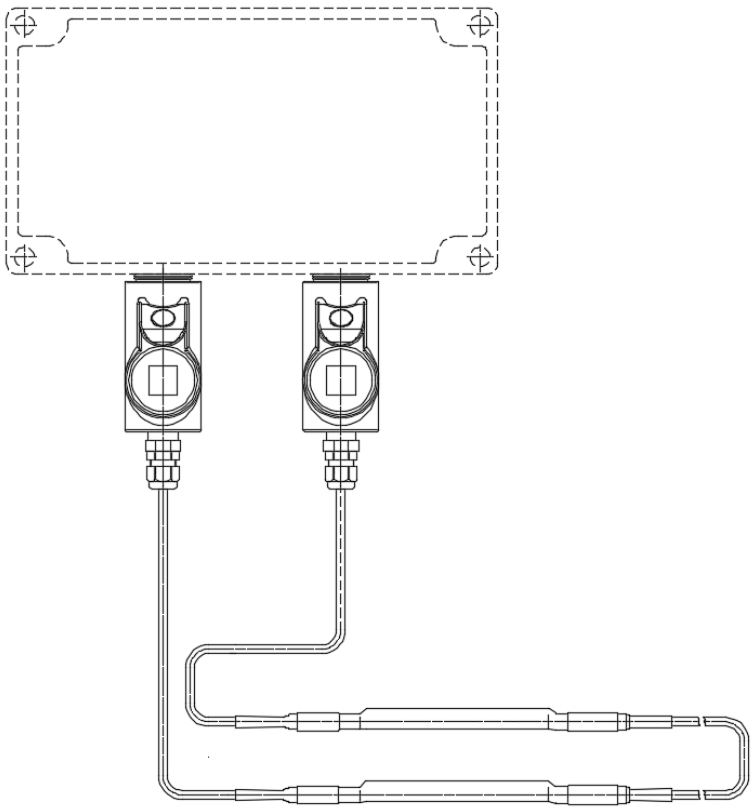

INSTRUCTIONS

1) unpack and inspect parts kit for completeness. Verify that components are suitable for Div1. Examine all components for possible handling or shipping damage. Damaged components must not be used!

   Repeat those steps with the trace heaters and measure trace heater insulation resistance (test voltage min. 500 VDC, preferably 2500VDC to be applied between braid and conductors, insulation resistance >= 20 MOhm)

.

2) choose position of Div1 junction box (not included) and associated mounting accessories

3) loosely position junction box to mounting bracket.

4) thread male nipple (supplied with sealing fitting, item 1) into ¾" NPT junction box entry.

5) thread the sealing fitting into the other side of the male adaptor (nipple) and tighten using wrenches.

6) repeat steps 4 and 5 for any other heater entry kit to be fitted to that junction box (e.g. when making a multiple power connection, a splice or a T-splice)

7) thread reducer into sealing fitting and tighten using wrenches

8) remove the threaded section of the cable gland (item 4) and thread into reducer

9) Slide the metal end cap, metal ring and sealing grommet of cable gland over trace heater. Position sealing grommet approx. 8 1/2" from heater cable end. Connect trace heater to terminals termination (see Page 11 for instructions).

TRACE HEATER TERMINATION INSTRUCTIONS

① carefully cut trace heater outer jacket using utility knife and remove (do not damage protective braid).

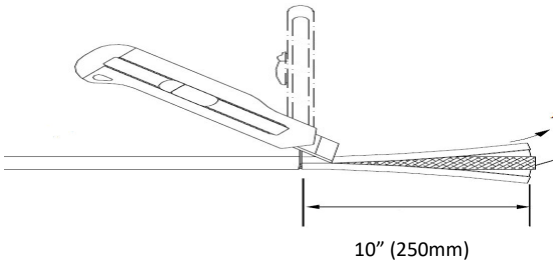

② expand braid by slightly pulling it towards the outer jacket, creating a bulge. Using a screwdriver, carefully separate the braid and pull trace heater through the expansion. Straighten the braid wires, being careful not to twist the wires.

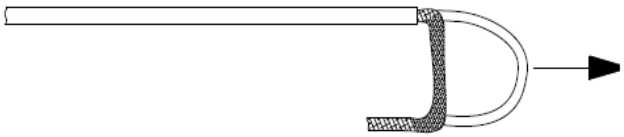

③ strip ½” (10mm) of insulation to expose conductor. Be careful not to damage the strands.

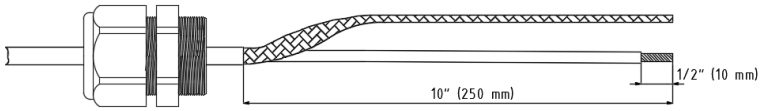

④ Place heat shrink tubing over straightened braid and crimp ring terminal to braid.

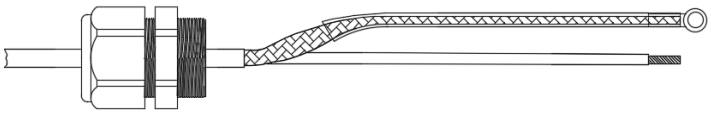

⑤ repeat steps 1 – 4 with the other end of the heater

⑥ measure and document trace heater insulation resistance (test voltage min. 500 VDC, preferably 2500VDC to be applied between braid and conductors, insulation resistance >= 20 MOhm)

SEALING FITTING AND JUNCTION BOX FINAL ASSEMBLY INSTRUCTIONS

① Remove junction box cover (loosen fastening screw on cover if required). Pull trace heater with assembled power connection through seal fitting assembly and junction box cable entry. Slide the assembly forward until the sealing grommet of the cable gland meets entry fitting of sealing gland (do NOT tighten).

Only one trace heater permitted per seal fitting.

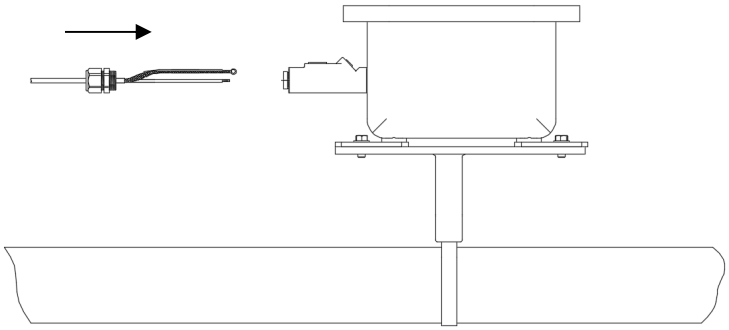

② Remove the two plugs on the seal fitting using the appropriate drive ratchet and hex tools. The trace heater should now be clearly visible in the fitting. If necessary, carefully pull heating cable through assembly until the end of the outer jacket of cable is centered in sealing fitting. Slide cable gland compression ring and metal end cap forward and thread the cable gland fitting into the sealing fitting entry and carefully tighten.

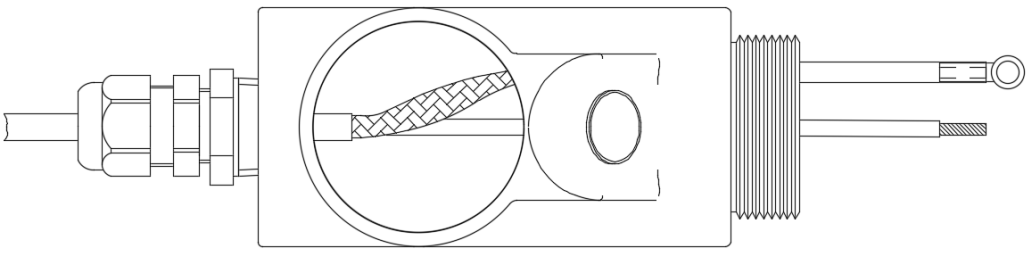

④ Mount junction box and seal fitting assembly to pipe, using Appropriate mounting hardware (brackets and straps). Re-inspect position of trace heater assembly prior to proceeding to sealing fitting assembly.

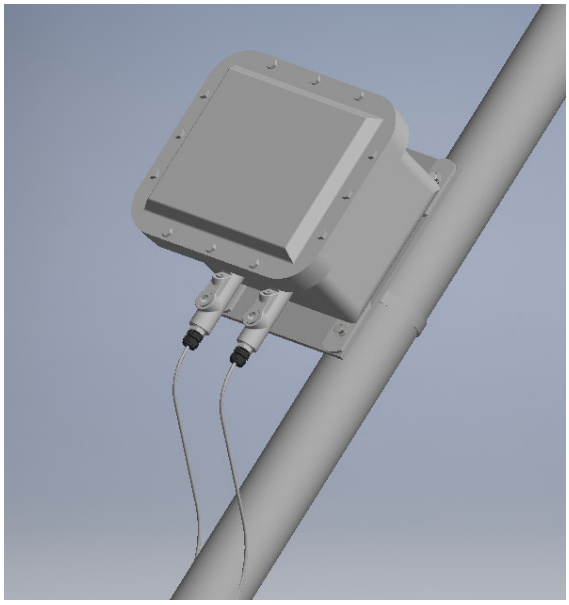

SEALING COMPOUND PROCEDURE

① Make sure the insulation resistance of the prepared trace heater has been measured before proceeding to step 2

②Place packing fibre (item 5) around trace heater on both sides Building a dam around the trace heater as shown below

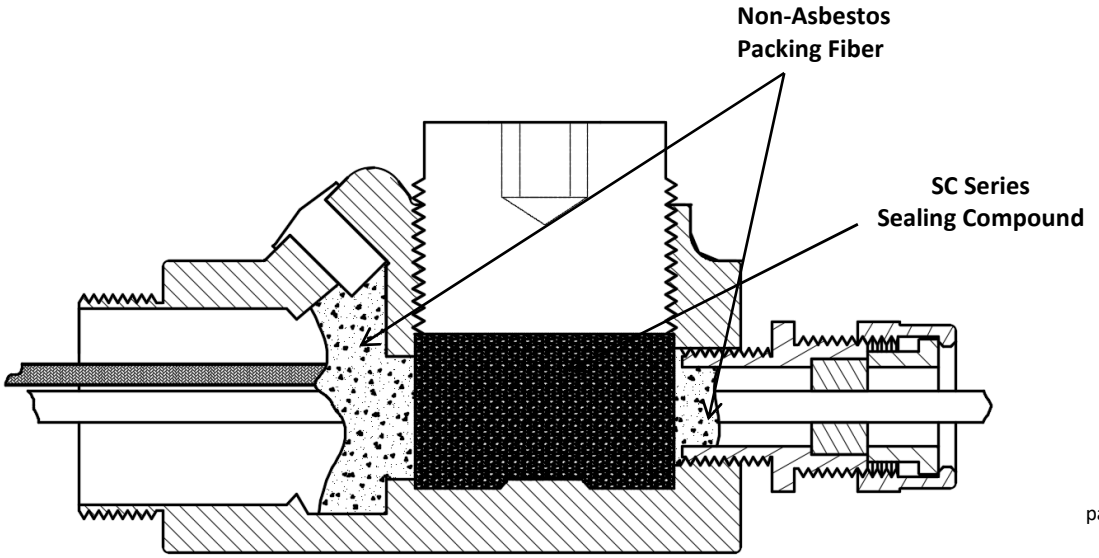

③ Mix sealing compound as per seal fitting compound instructions (provided on item 4).

④ Slowly pour sealing compound into seal fitting, making sure to cover the trace heater completely (do not overfill). For details refer to seal fitting instructions provided with item 2.

⑤ Install plugs and let compound properly set as per sealing compound instructions.

ELECTRICAL CONNECTION OF DIFFERENT CONFIGURATIONS

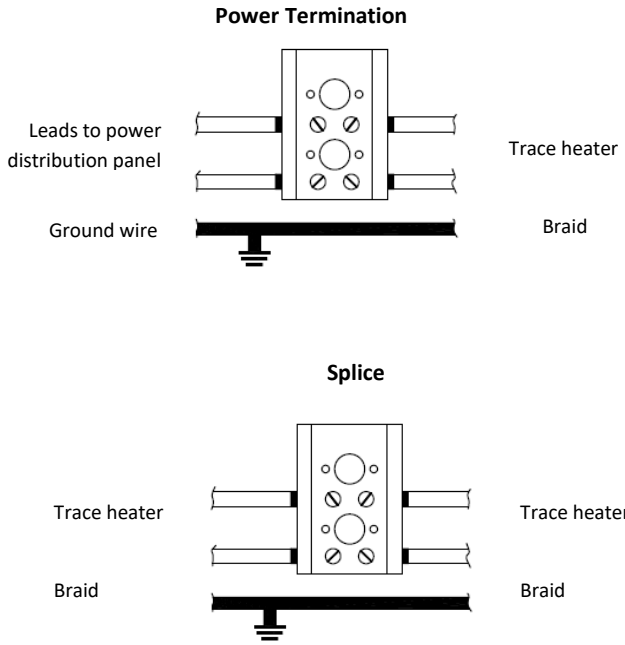

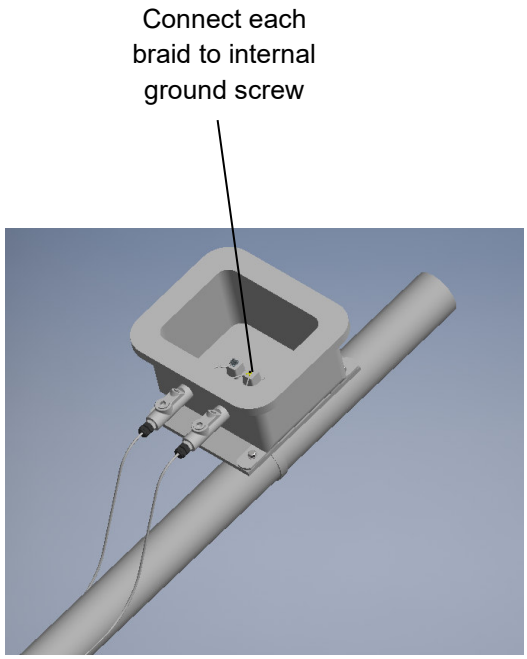

ADDITIONAL TESTS AFTER THERMAL INSULATION

Refer to trace heater operating manual QAA 147-A