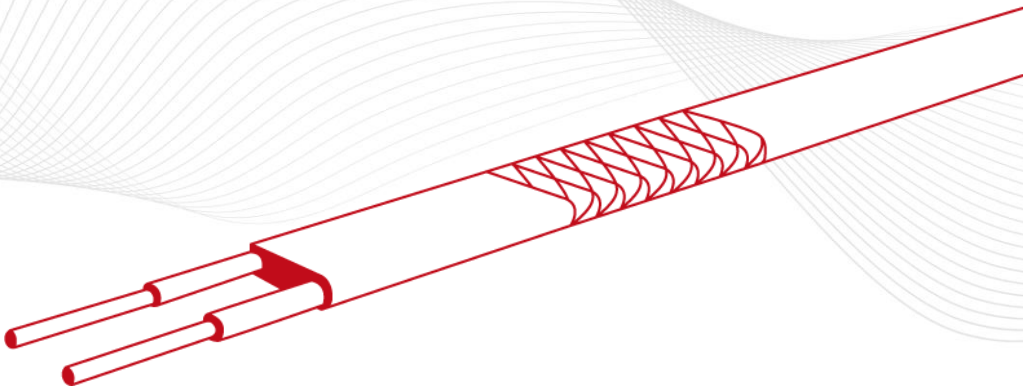

QAA 073

Mounting and Operating Instructions

Ex-It-R Junction Box and Mounting Post Kit for Pipes

eltherm GmbH Ernst-Heinkel-Str. 6-10 57299 Burbach T.: +49 2736 4413-0 F.: +49 2736 4413-50 info@eltherm.com	**QAA – 073** **0080225**	**Operating Instructions Ex-It-R Junction Box with mounting post for pipes**
	Author	Peter Schmidt
	Revision 5	27.07.2018

Content

1. Product description 3
1.1 Technical Data 3
1.2 Terminals: 3
1.3 Dimensional Drawings 4
1.4 Wiring Diagram 4

2. Instructions 5
2.1 Receipt of goods: 5
2.2 Storage: 5
2.3 Installation: 5
2.4 Testing: 6
2.5 Operation and Maintenance: 6

3. Installation guide 7
3.1 Recommended tools 7
3.2 Placement of Ex-It-R 7
3.3 Option “sensor cable” 8
3.4 Option “trace heater” 9

4. Assembly instructions 9
4.1 Fastening 9
4.2 Mounting 10
4.3 Strain relief for sensor cable 11

5. Closing and opening junction box ELAK-Ex-R 12
5.1 Closing 12
5.2 Opening 12

1. Product description

1.1 Technical Data

Equipment group: II 2G Ex eb IIC T6 Gb II 2D Ex tb IIIC T85°C Db
Standards: EN 60079-0, EN 60079-7, EN 60079-31
Operating temperature: - 20°C to + 100°C (threaded flange)
- 20°C to + 200°C (mounting post)
- 40°C to + 50°C (T6, T85°C, junction box)

Material: Plastic, non-conductive
Protection class: IP 65
Rated voltage: 550 V
Rated current: 28 A
KLE: Polyamide
Weight: approx. 1.2 kg
Impact resistance: min. 7J

Entries
Mounting bracket: 3 x flat cable; 1 x round cable

Cable dimensions: Dm 3 – 5 mm; 4 x 11 mm – 5.5 x 14 mm

Permissible sheath materials: TPE min. 0.7 mm; fluoropolymer min. 0.4 mm

Permissible pipe diameters: >= 20 m

Max. width of threaded clamp: 16 mm

Size	Cable Dia. (mm)	Wrench (mm)	Torque (Nm)	
			Mounting thread	Pressure screw
M16	4-7	15	2,5	2 - 1,65
M20	5,5-13	24	3,75	3,5 - 2,5
M25	8 - 17	29	5	5 -3

1.2 Terminals:

Terminal Size (mm²)	Conductor Cross Section (mm²)	Current (A)
1,5	0,5 – 2,5	15
2,5	0,5 – 4	21
4	0,5 - 6	28

1.3 Dimensional Drawings

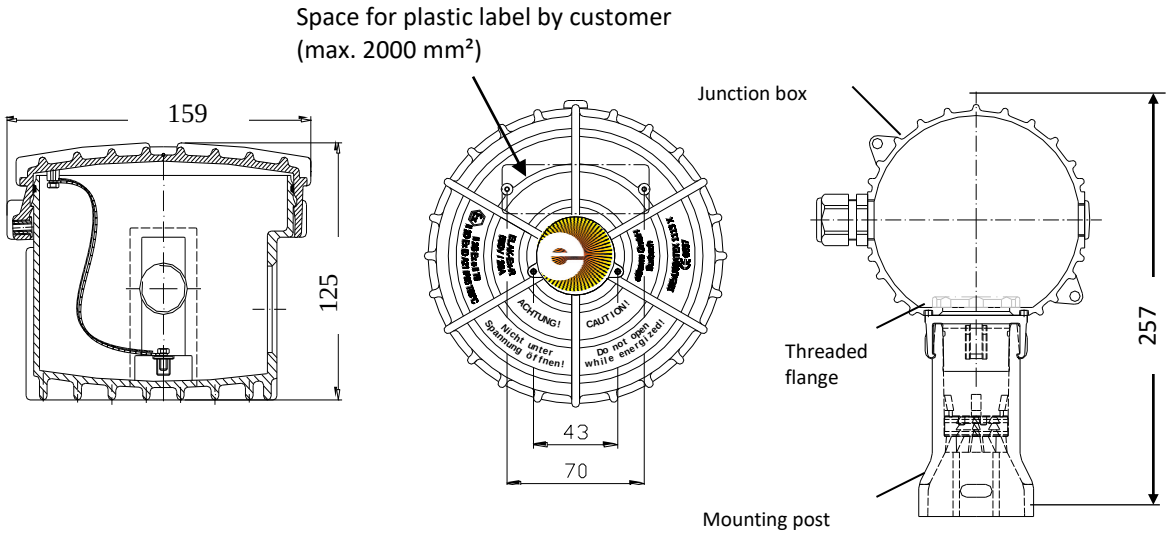

1.4 Wiring Diagram

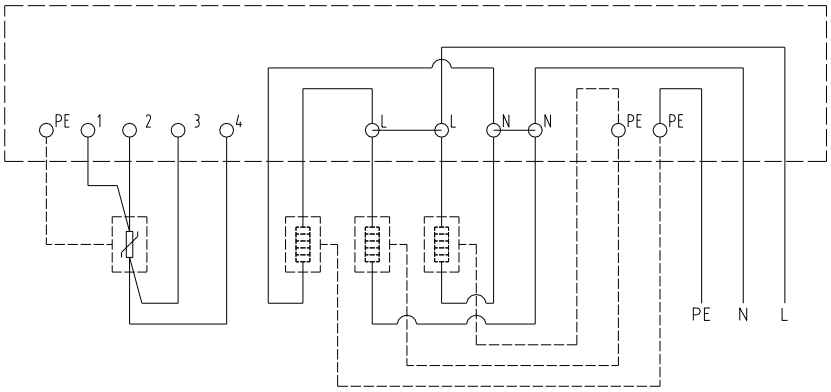

Attetion: the following steps should only be carried out by workers trained for the handling of Ex-equipment and protective systems.

2. Instructions

2.1 Receipt of goods:

On receipt of the goods check the junction box and the accessories and compare with the data on the delivery note to ensure that the correct material was supplied.

The identification marking of the mounting post reads:

eltherm GmbH Burbach Ex-It
Ex II 2G Ex eb IIC Gb Ex II 2D Ex tb IIIC Db

IBExU09ATEX 1023U, IECEx IBE12.0024U

The identification marking of the junction box ELAK-Ex-R reads:

eltherm GmbH Burbach ELAK-Ex-R 550V / 28A
Ex II 2G Ex eb IIC T6 Gb Ex II 2D Ex tb IIIC T85°C Db

IBExU08ATEX 1113 X IP65 <Lot-No: ...> CE0637
Warnung: Nicht unter Spannung öffnen!
Warning: Do not open while energized!

2.2 Storage:

The goods have to be stored in a dry place at an ambient temperature of 0 … +50°C.

2.3 Installation:

- check all components of Ex-It-R and the inserted / attached seals for integrity and cleanness
- observe the order of the installation steps shown in part B) installation guide!
- choose the installation site carefully with respect to the mechanical withstand of enclosure and cable entries and with respect to the permitted ambient temperature range
- make sure to mount mounting post to suitable pipes only (OD >=20 mm)
- provide sufficient allowance for heating cable
- do not fasten lock of tightening strap with a wrench (risk of damage to mounting post). Use screwdriver only!
- if cables are removed from an already mounted Ex-It-R, there will be holes in the internal seal of the mounting post: the relevant entry needs to be filled with another cable or the seal needs to be replaced
- round cables that have been fed through the mounting post need to be secured inside the junction box in order to provide sufficient strain relief
- fixed installation of all cables is required
- all electrical connections are to be made after complete fitting of cables and mounting post only

- terminals which are not in use need to be fastened
- entry threads may be reduced by a suitable reduction gland. Reduction glands must not be interleaved
- All openings (cover, threaded holes, cable entries) are to be tightly closed after connection of the cables. The torques given in chapter 1 „Technical Data“ are to be observed

  Attention: excessive tightening of glands can compromise the IP rating!
- the lid of the junction box is prepared for the mounting of identification tags provided by the customer. Mounting screws 2.2x 6 mm are to be used for this purpose.

2.4 Testing:

the below listed steps are to be followed after completion of the heating circuit installation:

- visual check of the Ex-It-R for possible mechanical damage. Damaged components must not be taken into operation and need to be exchanged
- check of all components for proper fit. Make sure both detent hooks of the adapter have interlocked in the second groove of the mounting post
- check of the lid of the junction box and of the attached cable entries for tight fit and correct sealing. Make sure both detent hooks have interlocked in the adequate rack of the junction box. All holes must be closed by means of appropriate devices rated “Ex e”

2.5 Operation and Maintenance:

- the effective regulations regarding the operation of electrical equipment in hazardous areas shall be observed
- operation is only permitted within the limits given in chapter 1 „Technical Data“ and on the label (Voltage, Current, Operating Temperature, Ambient Temperature, IP Rating)
- in order to prevent electrostatic charging, clean mounting post with a damp cloth only. The mounting post needs to be inserted at least 20 mm deep into the thermal insulation of the pipe
- a visual check of Ex-It-R for integrity and proper fit is recommended in suitable intervals (depending on the operating and environmental conditions). If required, cable entries are to be tightened; damaged components are to be replaced by experienced personnel
- in case of required disassembly of the junction box, open the lid, remove all terminated cable and unscrew the 1¼“ locknut. The junction box can now be removed

  Attention:
  The junction box (and also the cable entries!) must not be opened while energized.
- if repair work is done on heated components, the Ex-It-R has to be protected against damages
- after completion of repair works on heated components, the Ex-It-R has to be tested again according to chapter 2.4 “Testing”
- damaged Ex-It-R must not be operated.

3. Installation guide

3.1 Recommended tools

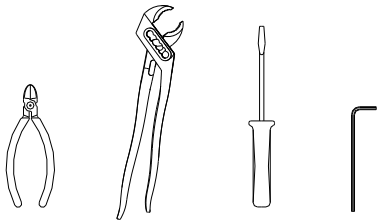

All Steps to be done by experienced personnel only !
After completion: check insulation resistance and measure heater resistance!

3.2 Placement of Ex-It-R

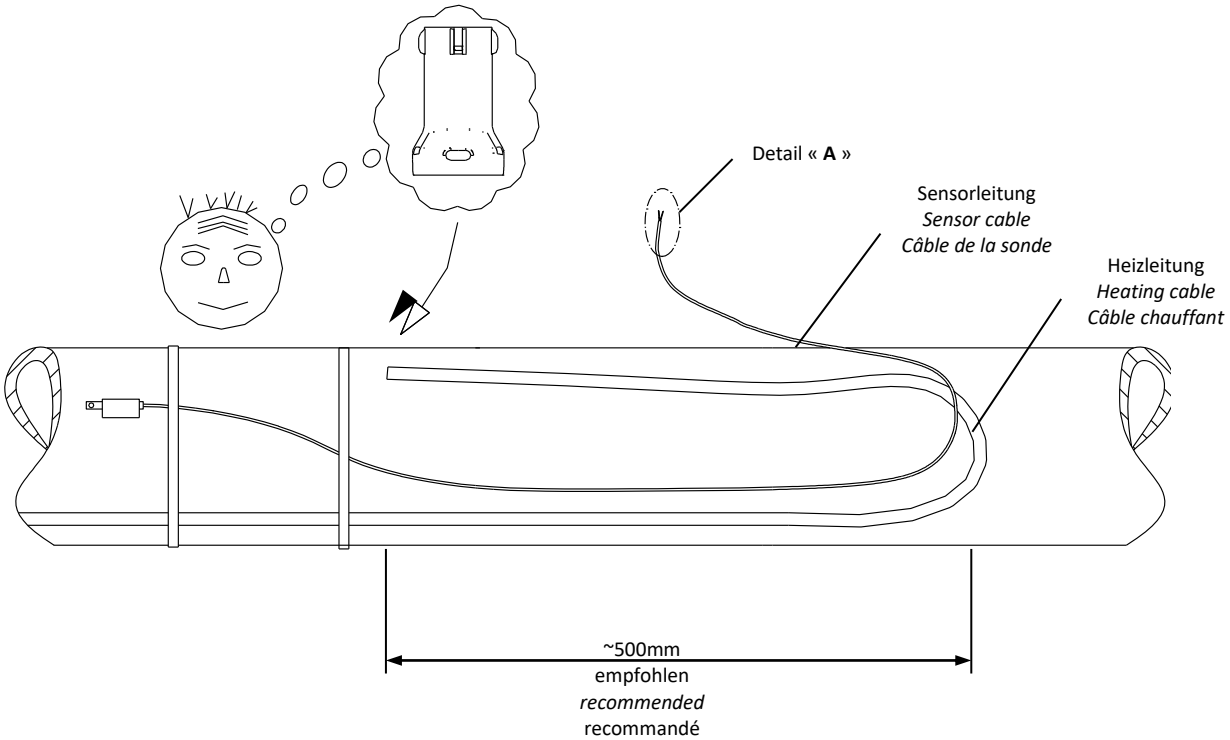

3.3 Option “sensor cable”

3a. Detail « A »

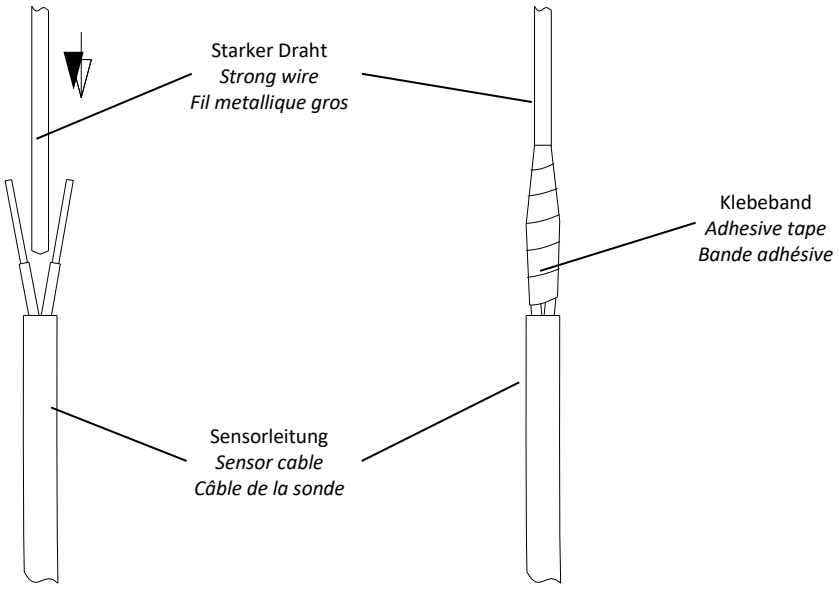

3b.

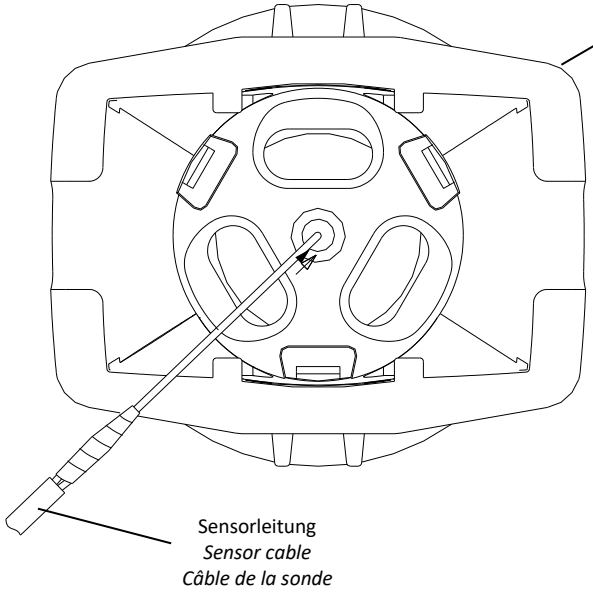

3c.

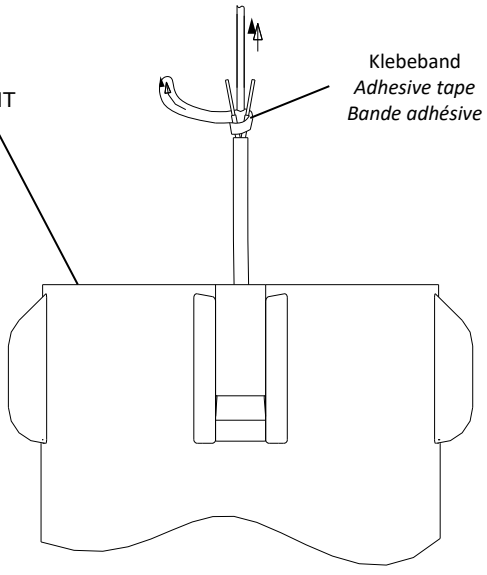

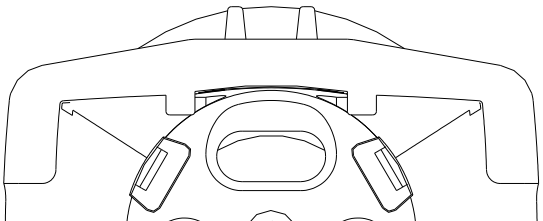

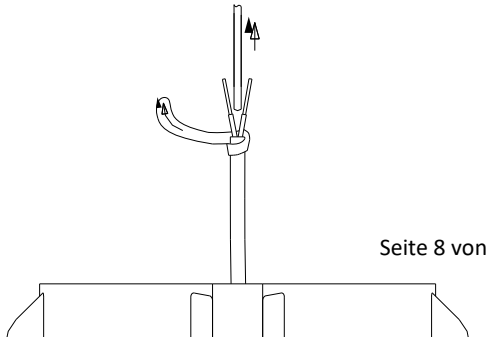

3.4 Option “trace heater”

4a.

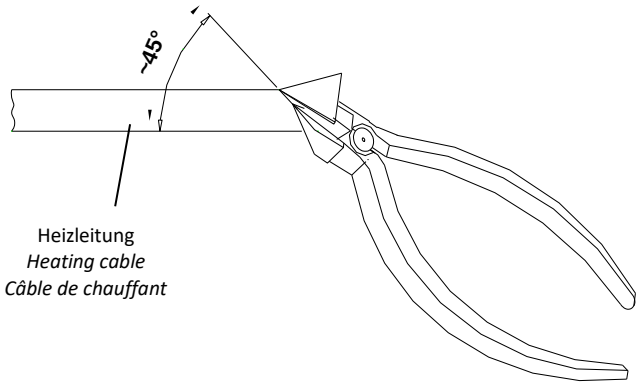

4b.

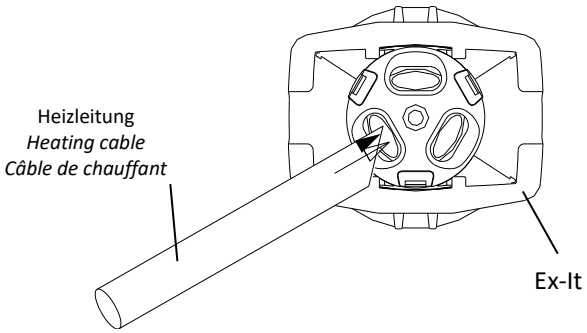

Trace heater termination: see separate instructions (QAA 097) in termination kit
Seal cable ends after installation!

4. Assembly instructions

4.1 Fastening

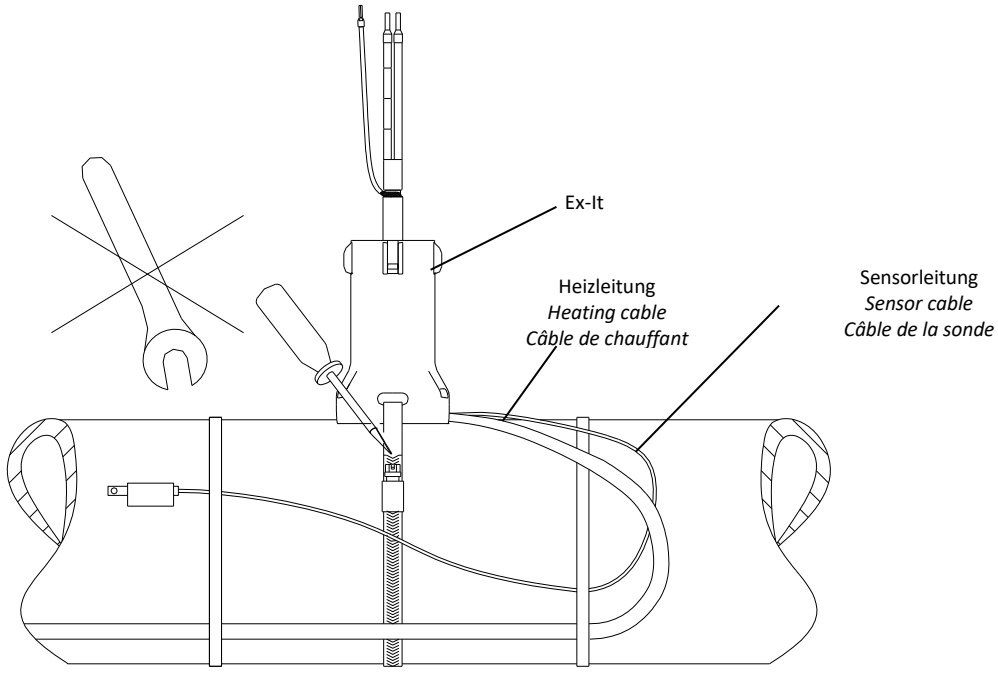

Spannband nicht über Heiz- und Sensorleitung führen!
Do not feed tightening strap above heating cable or sensor cable!
Ne mener pas tendeur à vis au dessus de la câble de chauffant ou câble de la sonde!

4.2 Mounting

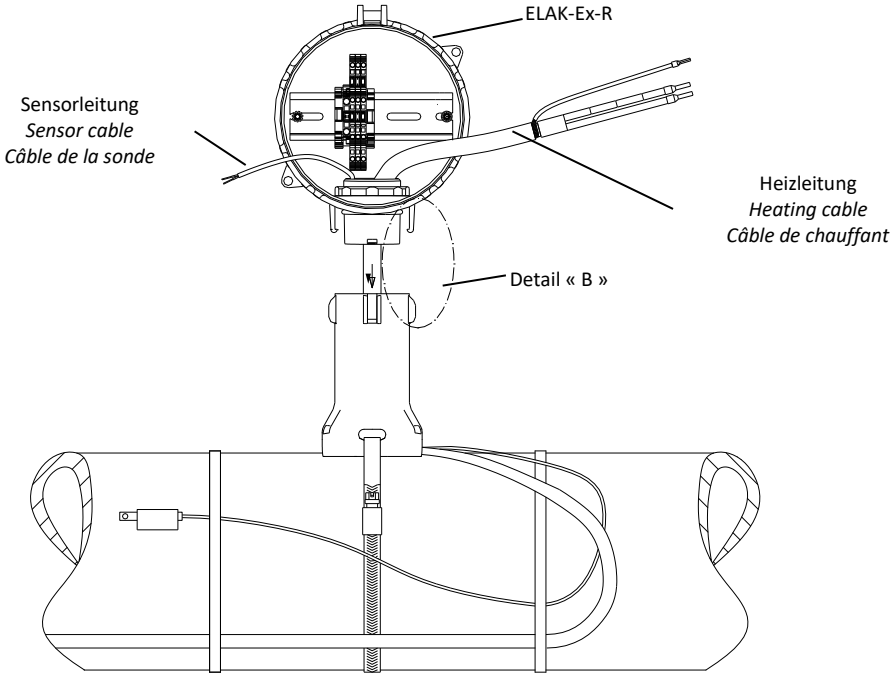

Detail « B **»**

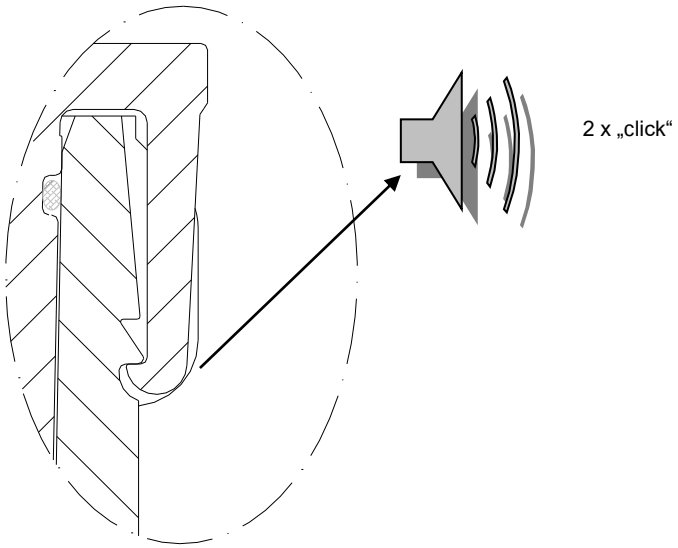

4.3 Strain relief for sensor cable

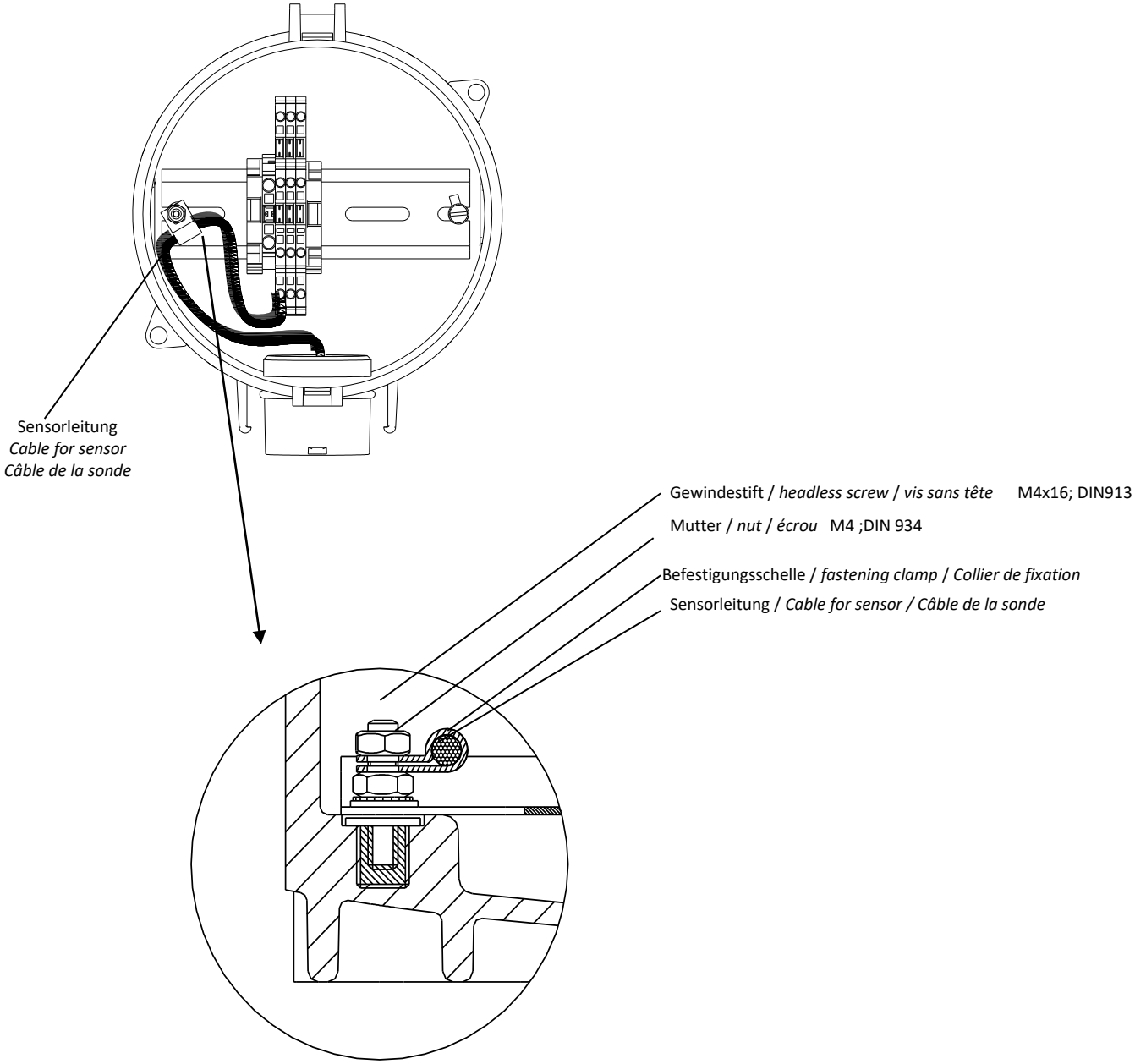

5. Closing and opening junction box ELAK-Ex-R

5.1 Closing

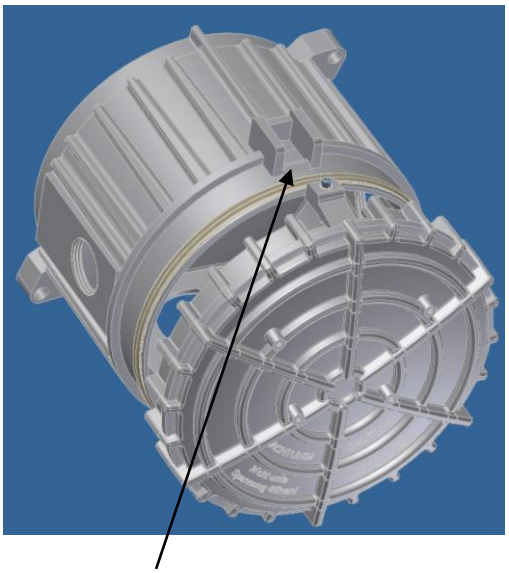

Detent hook with hex socket grub screw has to be placed here

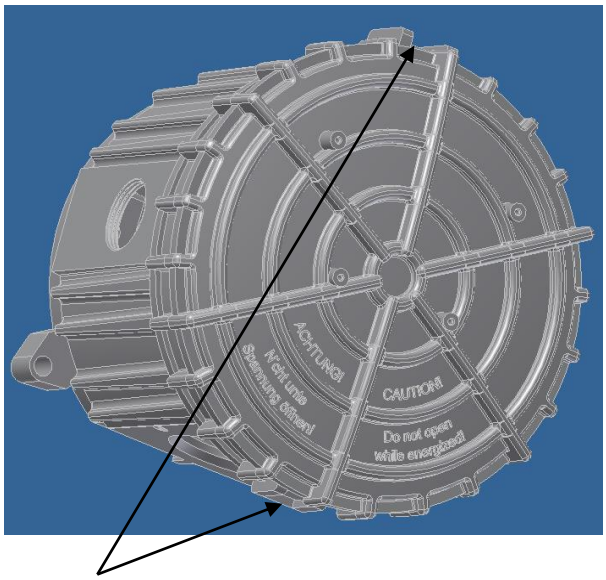

Press cover in the area of the detent hooks and…

5.2 Opening

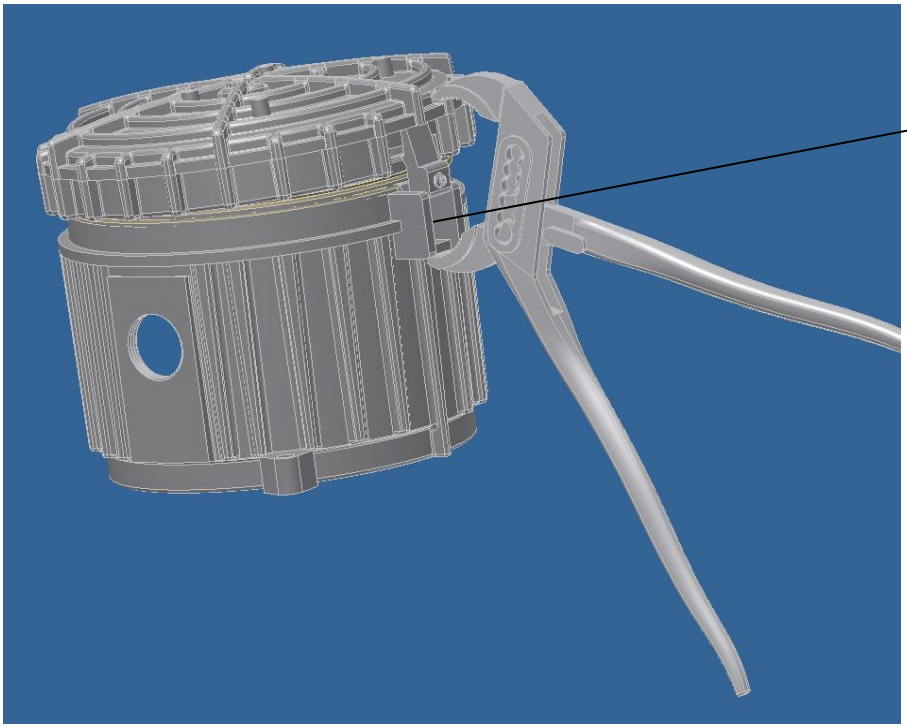

…engage both hooks with a „click”

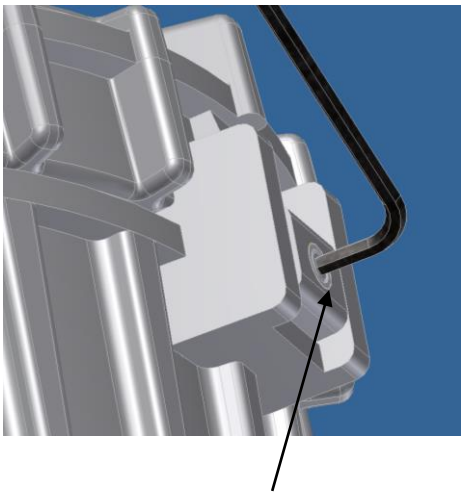

turn the hex socket grub screw clockwise with a hex. socket screw key No. 2 until the detent hooks top is aligned with the racks

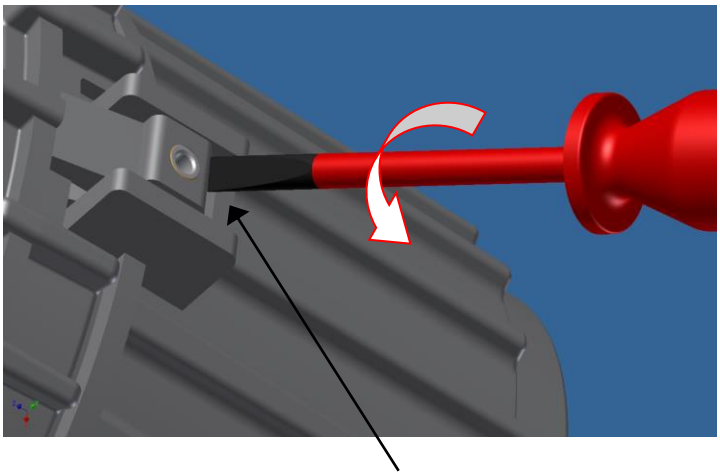

Put a slotted screw driver between detent hook and back base and slide hook some millimeters forward
(by turning the screw driver)

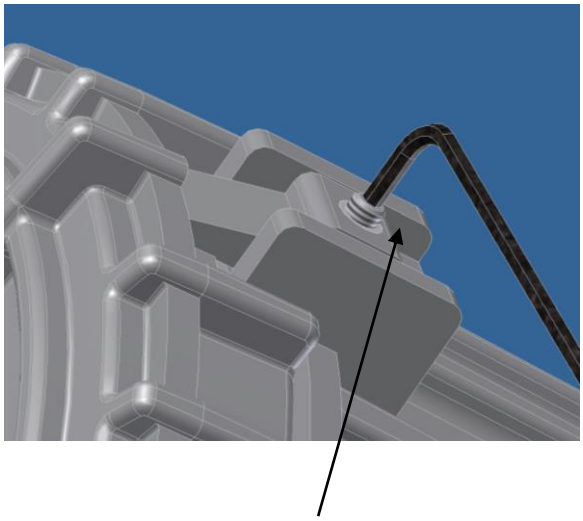

turn the hex socket grub screw counter-clockwise with a hex. socket screw key No. 2 until it slightly protrudes from the hook



Take cover away
(by means of screw driver if necessary)