QAA 142
Termination instructions
Self-regulating trace heaters type ELSR-NA, …-HA and …-SH+ in Div1 with heater entry kit EL-HAZELECT

Kit part No: 09CA051

QAA 142
Instruction de terminaison pour des câbles chauffants autorégulants type ELSR-NA, …-HA et …-SH+ en Div1 avec avec kit d'entrée EL-HAZELECT

Réf. de pièces: 09CA051

eltherm Canada Inc.
1155 Appleby Line, Unit E7
Burlington, ON L7L 5H9
Canada
Phone: +1 (289) 812-6631 1
Fax: +1 (844) 325-6750
E-Mail: info@eltherm.ca
Internet: www.eltherm.ca

DESCRIPTION

The heater entry kit EL-HAZELECT (09CA051) is designed for use with eltherm's self-regulating trace heaters ELSR-NA, …-HA and …-SH+ in Division 1 rated hazardous areas. The kit contains all required parts necessary for assembly and sealing of a single trace heater entry. By fitting the completed kit to a suitable Div1 rated junction box (e.g. Hubbell Killark HKB or GECTT), various configurations (power termination, end termination, splice, T-splice etc.) can be achieved. Please follow these instructions carefully.



1. *Recommended tools / Outils recommandés*



- Utility knife
- Needle nose pliers
- Ruler
- Marking pen/pencil
- Insulation Resistance Test Equipment (Megger)
- Diagonal cutters
- standard (slotted) screwdriver
- 0.109" hex driver
- 1/4" hex driver
- 3/8" hex driver
- pipe wrenches (2)

2. *Contents of kit / Contenue du jeu de connexion*

Item	Description	Qty
1	Seal Fitting c/w nipple (3/4" NPT)	1
2	sealing compound	1
3	packing fiber	1
4	cable gland T & B 2238	1
5	cable gland T & B 2239	1
6	silicone glue	1
7	heat shrinkable tubing 3/16" 115 mm long	1
8	silicone isolator	1
9	ring terminal	1
10	terminal block AWG 8	1

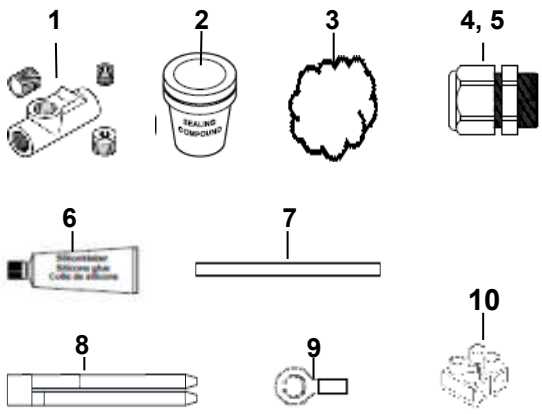

3. ADDITIONAL / OPTIONAL ITEMS

- Div1 junction box with terminals (recommended rating 40A in order to fully exploit the trace heater capabilities)
- Conduit plugs
- Conduit (for power leads only)
- Mounting bracket for Division 1 junction box
- Pipe straps and other mounting accessories



Installation and connections must be made in compliance with NEC, CEC and local wiring regulations and electrical codes.

Component approvals and performance ratings are based on the use of approved eltherm parts and accessories only.

Assembly to be performed by personnel trained, qualified and knowledgeable in Div1 trace heating systems.



Le montage et les raccordements doivent être réalisés en conformité avec les directives et les codes de l'électricité NEC et CEC.

L'homologation de composant et les cotes de rendement sont basées sur l'utilisation exclusive des pièces et des accessoires du fabricant eltherm.

L'assemblage doit être effectué par du personnel formé et qualifié avec des connaissances dans les systèmes de traçage électrique Div1.

Important Notes and Safety Information
Remarques importantes et consignes de sécurité

Make sure to use appropriate tools for connections of wires and end sleeves
S'assurer d'utiliser l'outillage approprié pour exécuter les raccordements en accord avec la dimension des câbles et des terminaisons.

Assembly steps are to be performed by authorized personnel only
Seul le personnel qualifié et formé est autorisé à effectuer ces activités !

After assembly perform all tests required by NEC / CEC and local electrical codes!
Une fois les travaux terminés, réaliser tous les essais requis par NEC /CEC et les codes d'électricité locaux!

WARNING!

Installation and connections must be made in compliance with NEC, CEC and local wiring regulations and electrical codes.

Component approvals and performance ratings are based on the use of approved eltherm parts and accessories only.

Assembly to be performed by properly trained and qualified personnel only.

Agency approvals and national electrical codes require the use of ground-fault protection to be used.

CAUTION!

Read all hazard warnings on supplied sealing compound container carefully, avoid physical contact with compound by wearing appropriate safety clothing.

System Overview

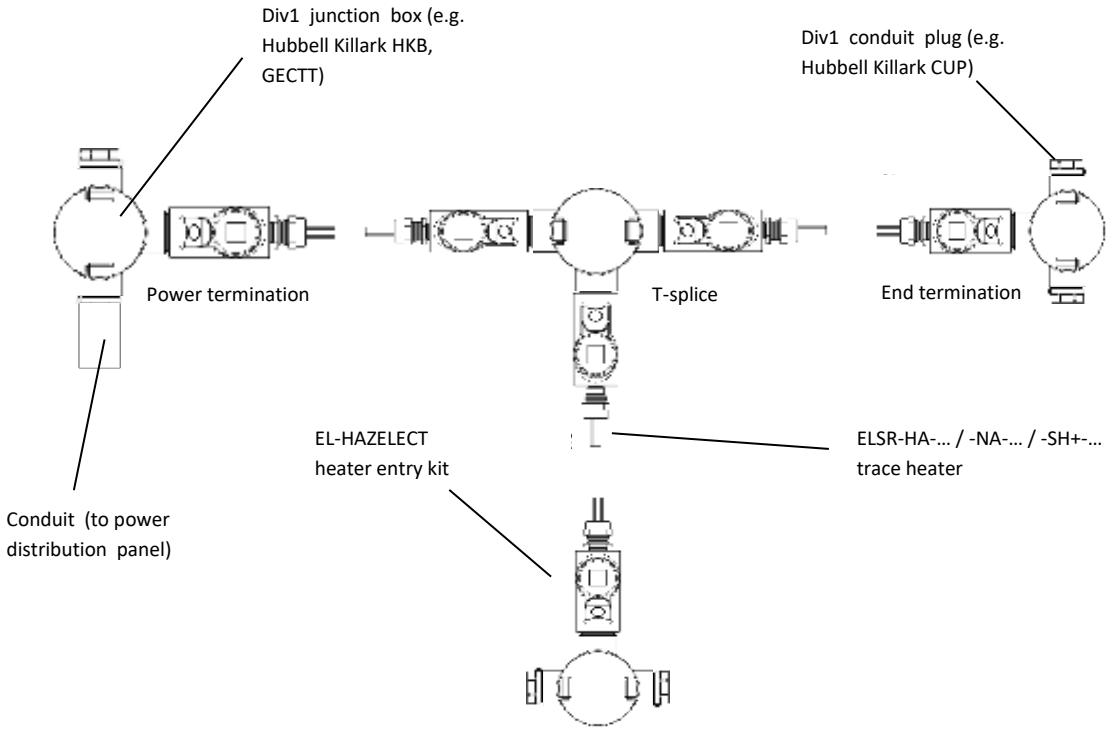

INSTRUCTIONS

① Unpack and inspect parts kit for completeness. Verify that components are suitable for Div1. Examine all components for possible handling or shipping damage. Damaged components must not be used!

Repeat those steps with the trace heaters and measure trace heater insulation resistance (test voltage min. 500 VDC, preferably 2500VDC to be applied between braid and conductors, insulation resistance >= 20 MOhm)

.

② choose position of Div1 junction box (not included) and associated mounting accessories

③ Loosely position junction box to mounting bracket.

④ Thread male nipple (supplied with sealing fitting, item 1) into ¾" NPT junction box entry.

⑤ Thread the sealing fitting into the other side of the male adaptor (nipple) and tighten using wrenches.

⑥ Repeat steps 4 and 5 for any other heater entry kit to be fitted to that junction box (e.g. when making a multiple power connection, a splice or a T-splice)

⑦ remove the threaded section of the cable gland (item 4 or 5) and thread into sealing fitting

Caution: use gland T&B 2238 (item 4; small opening) with ELSR-HA heaters
use gland T&B 2239 (item 5; wide opening) with ELSR-NA and …-SH+ heaters

⑧ Slide the metal end cap, metal ring and sealing grommet of cable gland over trace heater. Position sealing grommet approx. 8 1/2" from heater cable end. Connect trace heater to terminals termination (see Page 11 for instructions).

TRACE HEATER TERMINATION INSTRUCTIONS

① Carefully cut trace heater outer jacket using utility knife and remove (do not damage protective braid).

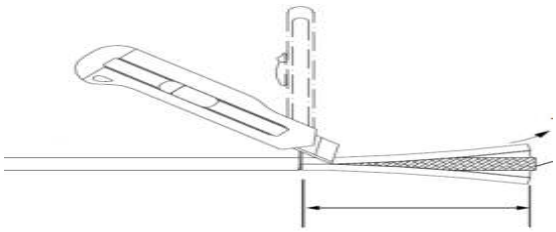

7.5” (190mm)

② expand braid by slightly pulling it towards the outer jacket, creating a bulge. Using a screwdriver, carefully separate the braid and pull trace heater through the expansion. Straighten the braid wires, being careful not to twist the wires.



③ mark insulation at 7” (175mm) from end of trace heater and carefully cut insulation layer with utility knife and remove, exposing heating element and bus wires, as shown below.

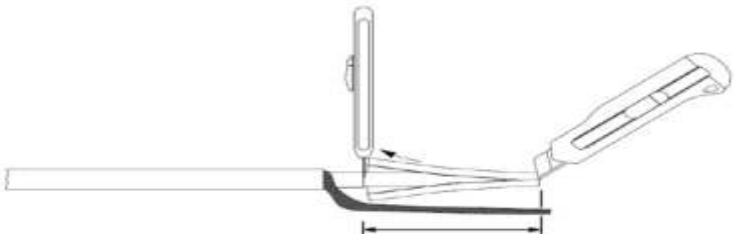

7” (175mm)

④ Using needle nose pliers, pull away each bus wire from the heating element and expose.

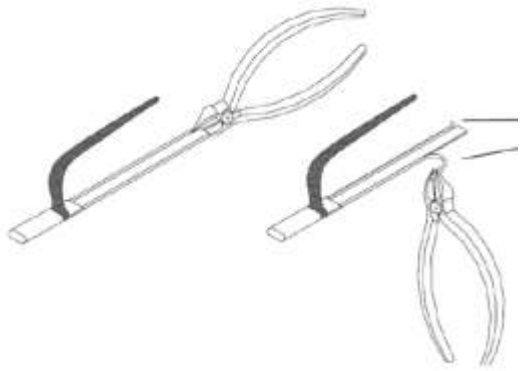

⑤ Remove exposed heating element. Use a utility knife to carefully remove any residual heating element left on the bus wires.

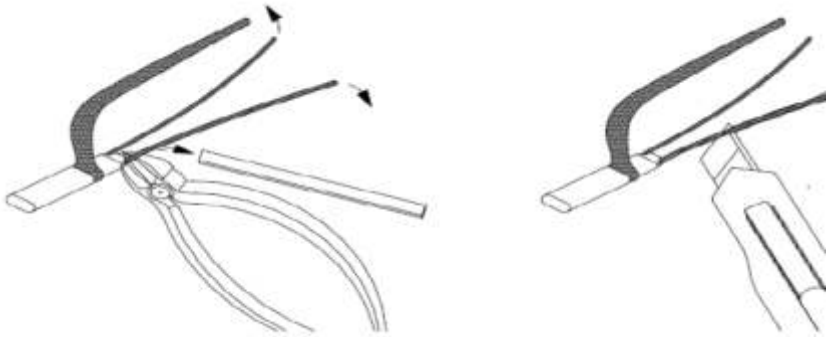

⑥ Place a small amount of silicone glue (item 7) on the exposed insulation. Feed bus wires through silicone isolator (item 9). Push silicone isolator over insulation and glue. Place heat shrink tubing (item 8) over braid.

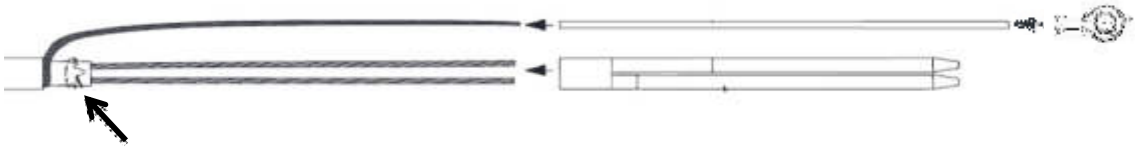

Apply silicone here

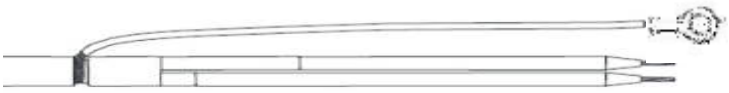

⑦ measure and document trace heater insulation resistance (test voltage min. 500 VDC, preferably 2500VDC to be applied between braid and conductors, insulation resistance >= 20 MOhm)

SEAL FITTING AND JUNCTION BOX FINAL ASSEMBLY INSTRUCTIONS

① Remove junction box cover (loosen fastening screw on cover if required). Pull trace heater with assembled power connection through seal fitting assembly and junction box cable entry. Slide the assembly forward until the sealing grommet of the cable gland meets entry fitting of sealing gland (do NOT tighten).

Only one trace heater permitted per seal fitting.

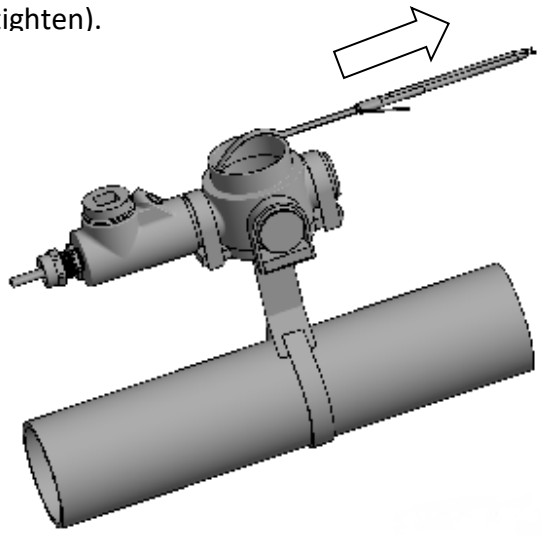

② Remove the two plugs on the seal fitting using the appropriate drive ratchet and hex tools. The trace heater should now be clearly visible in the fitting. If necessary, carefully pull heating cable through assembly until the end of the outer jacket of cable is centered in sealing fitting. Slide cable gland compression ring and metal end cap forward and thread the cable gland fitting into the sealing fitting entry and carefully tighten.

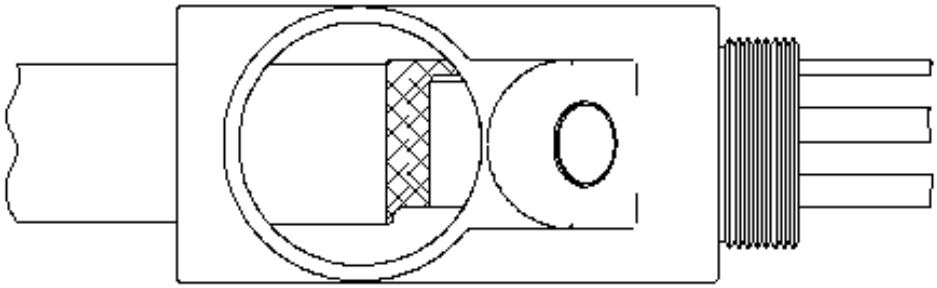

④ Mount junction box and seal fitting assembly to pipe, using Appropriate mounting hardware (brackets and straps). Re-inspect position of trace heater assembly prior to proceeding to sealing fitting assembly.

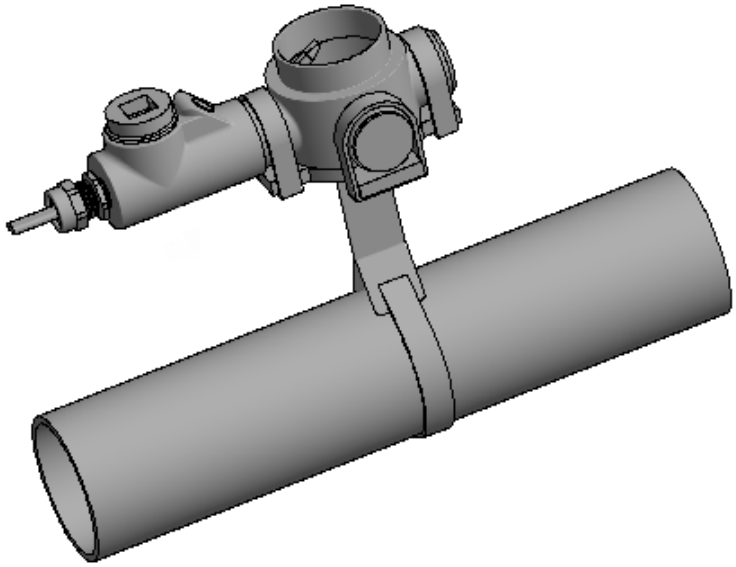

SEALING COMPOUND PROCEDURE

① Make sure the insulation resistance of the prepared trace heater has been measured before proceeding to step 2

②Place packing fibre (item 5) around trace heater on both sides Building a dam around the trace heater as shown below

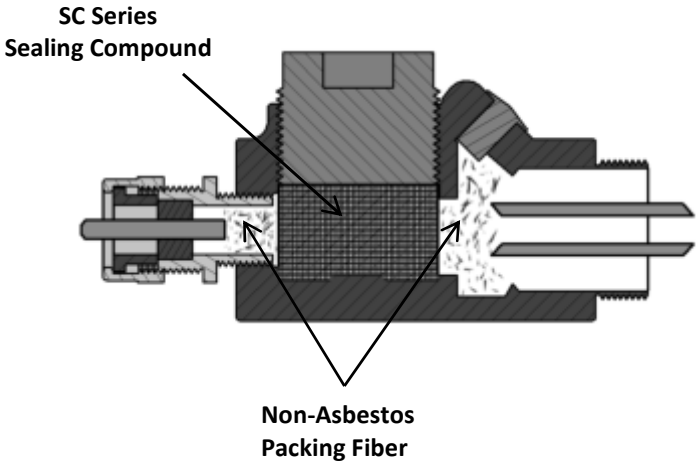

③Mix sealing compound as per seal fitting compound instructions (provided on item 4).

④Slowly pour sealing compound into seal fitting, making sure to cover the trace heater completely (do not overfill). For details refer to seal fitting instructions provided with item 2.

⑤Install plugs and let compound properly set as per sealing compound instructions.

ELECTRICAL CONNECTION OF DIFFERENT CONFIGURATIONS

Power Termination

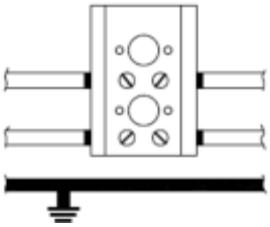

End Termination

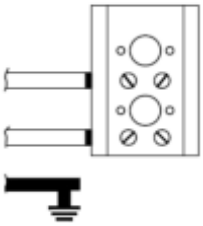

Splice

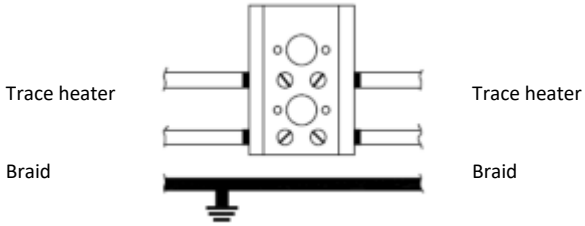

T-Splice

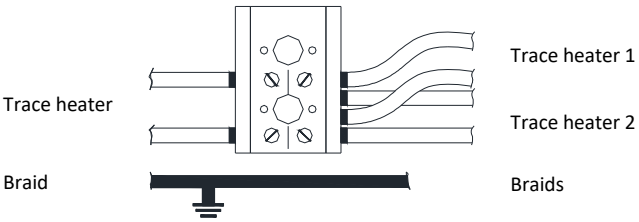

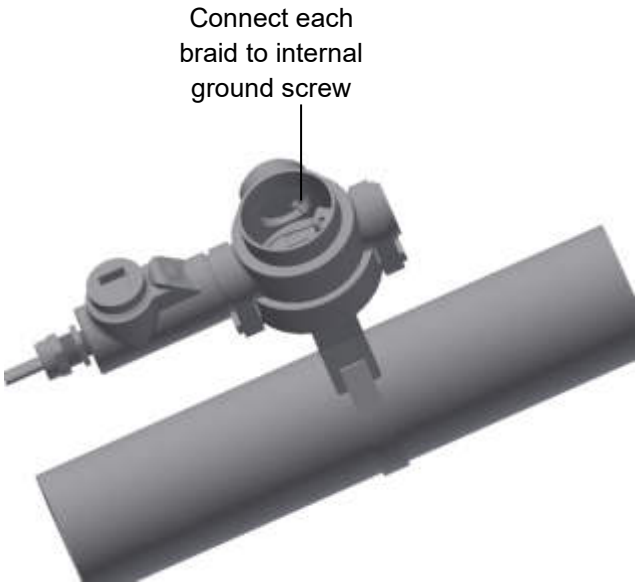

Multiple Power Connection

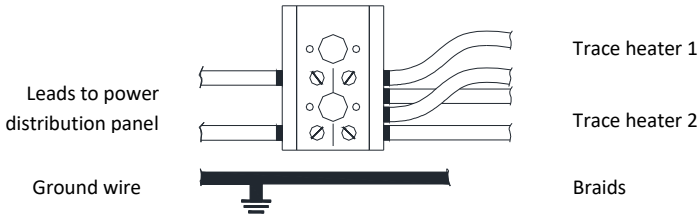

ADDITIONAL TESTS AFTER THERMAL INSULATION

Refer to trace heater operating manual QAA 085-A